City of Boerne

Boerne,
Texas

Standard Specifications for Public Works Construction

July 2015

Table of Contents

DIVISION 1 - GENERAL REQUIREMENTS

01060 SPECIAL CONDITIONS
01340 SUBMITTALS
01560 ENVIRONMENTAL PROTECTION AND SPECIAL CONTROLS
01600 PRODUCT DELIVERY, STORAGE, AND HANDLING
01601 JOB CONDITIONS
01710 CLEANING
01800 OPENINGS AND PENETRATIONS IN CONSTRUCTION

DIVISION 2 - SITE WORK

02072 DEMOLITION, CUTTING AND PATCHING
02110 SITE CLEARING
02200 EARTHWORK
02221 TRENCHING, BACKFILLING, AND COMPACTING FOR UTILITIES
02224 PIPELINE UNDERCROSSINGS
02260 TOPSOILING AND FINISHED GRADING
02270 SOIL EROSION AND SEDIMENT CONTROL
02423 STORM DRAINAGE SYSTEM
02444 CHAIN LINK FENCE AND GATES
02502 CONCRETE PAVEMENT, CURB, SIDEWALK AND STEPS
02511 SEAL COAT
02512 SUBSURFACE DRAIN SYSTEM
02513 ASPHALTIC CONCRETE VEHICULAR PAVING
02514 SIGNS
02530 SANITARY SEWER SYSTEM
02531 CLEANING SANITARY SEWERS
02532 VIDEO INSPECTION OF SANITARY SEWERS
02560 NATURAL GAS DISTRIBUTION SYSTEM
02660 POTABLE WATER MAIN CONSTRUCTION
02670 RECLAIMED WATER MAIN CONSTRUCTION
02930 SEEDING, SODDING AND LANDSCAPING

DIVISION 3 - CONCRETE

03002 CONCRETE

DIVISION 9 - FINISHES

09905 PAINTING AND PROTECTIVE COATINGS

DIVISION 16 - ELECTRICAL

16100 CITY OF BOERNE UNDERGROUND ELECTRIC DISTRIBUTION

List of Detail Drawings

DRAWING NO.	DESCRIPTION
00000-1.0	TYPICAL UTILITY LAYOUT – ELECTRIC IN ROW & SIDEWALK AT CURB
00000-1.1	TYPICAL UTILITY LAYOUT – ELECTRIC IN EASEMENT & SIDEWALK AT ROW
02221-1.0	UTILITY PIPE TRENCH
02224-1.0	CASED BORE PIPELINE UNDERCROSSING
02224-1.1	CASING VENT FOR GAS MAIN UNDERCROSSING
02423-1.0	CONCRETE FLUME
02423-1.1	CONCRETE RIP-RAP TYPICAL SECTION
02502-1.0	CONCRETE PAVEMENT SECTION
02502-1.1	ASPHALT TO CONCRETE PAVEMENT JOINT
02502-1.2	CONCRETE JOINTS
02502-2.0	CONCRETE CURB
02502-3.0	CONCRETE DRIVEWAY APPROACH – SIDEWALK AT CURB
02502-3.1	CONCRETE DRIVEWAY APPROACH – SIDEWALK AT ROW LINE
02502-4.0	CONCRETE SIDEWALK
02502-4.1	SIDEWALK CURB RAMPS SIDEWALK AT ROW LINE
02502-4.2	SIDEWALK CURB RAMP ON RADIUS SIDEWALK AT ROW LINE
02502-4.3	SIDEWALK CURB RAMPS SIDEWALK AT CURB
02502-4.4	SIDEWALK CURB RAMP ON RADIUS SIDEWALK AT CURB
02502-4.5	SIDEWALK UNDERDRAIN
02513-1.0	ASPHALTIC CONCRETE PAVEMENT SECTION
02513-1.1	ASPHALTIC CONCRETE PAVEMENT REPAIR
02514-1.0	STREET SIGN
02514-1.1	SIGN POST AND FOUNDATION
02530-1.0	STANDARD SANITARY SEWER SERVICE LATERAL
02530-1.1	DEEP SANITARY SEWER SERVICE LATERAL
02530-1.2	SANITARY SEWER SERVICE SADDLE CONNECTION
02530-2.0	STANDARD SANITARY SEWER MANHOLE
02530-2.1	SANITARY SEWER DROP MANHOLE
02530-2.2	MANHOLE RING ENCASEMENT
02530-3.0	END OF SEWER CLEANOUT
02530-3.1	CAST IRON CLEANOUT BOOT
02530-4.0	SANITARY SEWER CONCRETE ENCASEMENT
02530-4.1	SANITARY SEWER CONCRETE CRADLE
02530-4.2	SANITARY SEWER CONCRETE SADDLE
02560-1.0	GAS VALVE AND VALVE BOX
02560-1.1	GAS WARNING SIGN
02560-1.2	TRACER WIRE LOCATE BOX
02560-1.3	GAS SERVICE
02660-1.0	WATER GATE VALVE AND VALVE BOX

DRAWING NO.	DESCRIPTION
02660-1.1	CONCRETE THRUST BLOCKING
02660-2.0	FIRE HYDRANT ASSEMBLY
02660-2.1	FIRE HYDRANT ALTERNATE INSTALLATION
02660-3.0	1 IN AIR RELEASE VALVE FOR WATER MAINS
02660-3.1	END OF WATER MAIN BLOWOFF
02660-4.0	¾ TO 2 IN SINGLE WATER SERVICE
02660-4.1	DUAL ¾ IN WATER SERVICES
02660-4.2	6 IN FIRE SERVICE
02670-1.0	RECLAIMED WATER GATE VALVE AND VALVE BOX
02670-1.1	CONCRETE THRUST BLOCKING
02670-2.0	1 IN AIR RELEASE VALVE FOR RECLAIMED WATER MAINS
02670-2.1	END OF RECLAIMED WATER MAIN BLOWOFF
02670-3.0	¾ TO 2 IN SINGLE RECLAIMED WATER SERVICE
02670-3.1	DUAL ¾ IN RECLAIMED WATER SERVICES
16100-1.0	ELECTRIC PAD LAYOUT IN ROW FOR UNDERGROUND DISTRIBUTION
16100-1.1	ELECTRIC PAD LAYOUT IN EASEMENT FOR UNDERGROUND DISTRIBUTION
16100-2.0	PRIMARY ELECTRIC TRENCH
16100-2.1	PRIMARY AND SECONDARY ELECTRIC TRENCH
16100-2.2	SECONDARY ELECTRIC TRENCH
16100-2.3	STREET LIGHT CONDUIT TRENCH
16100-3.0	THREE PHASE JUNCTION BOX PAD FOR UNDERGROUND DISTRIBUTION
16100-3.1	THREE PHASE JUNCTION BOX PAD FOR UNDERGROUND DISTRIBUTION
16100-3.2	SINGLE PHASE JUNCTION BOX PAD FOR UNDERGROUND DISTRIBUTION
16100-3.3	SINGLE PHASE TRANSFORMER PAD FOR UNDERGROUND DISTRIBUTION
16100-3.4	METERING PEDESTAL PAD FOR UNDERGROUND DISTRIBUTION
16100-4.0	UNDERGROUND TO OVERHEAD THREE PHASE RISER

City of Boerne

DIVISION 1

SECTION 01060
SPECIAL CONDITIONS

PART 1 - GENERAL

1.1 DEFINITIONS

A. The definitions shown below have the meaning indicated in these standard specifications unless otherwise noted.
   1. **City**: The City of Boerne, Texas as represented by the Public Works Department.
   2. **Owner**: For subdivision and other private development projects, the Owner is the property owner or developer that is managing and financing the subdivision or development project.
   3. **Engineer**: The Licensed Professional Engineer or Engineering Firm employed by the Owner to Design the public improvements to be dedicated to the City upon completion of construction in accordance with the City of Boerne Subdivision Ordinance, Development Plat Ordinance, or other Ordinance governing the improvements being constructed.
   4. **Contractor**: The General construction contractor hired by Owner to provide for the management and construction of the public improvements to be dedicated to the City upon completion of construction in accordance with the City of Boerne Subdivision Ordinance, Development Plat Ordinance, or other Ordinance governing the improvements being constructed.

1.2 PRECONSTRUCTION CONFERENCE

A. A preconstruction conference shall be conducted at Boerne City Hall after plans have been approved by Boerne Public Works. Engineer will contact Boerne Public Works and request that the Preconstruction Conference be scheduled 2 weeks in advance of the proposed date. Contractor's Project Manager and Project Superintendent and Contractor's Subcontractor Representatives shall attend. Owner and Engineer representatives shall attend the Preconstruction Conference.

1.3 PROJECT SIGNS

A. Furnish and install one of each of the following signs:
   1. Contractor's standard sign approved by Owner and City of Boerne.

B. Install in location approved by City.

C. Comply with provisions of the City of Boerne Sign Ordinance.

D. Signs not listed in this Specification permitted only upon approval of Owner and City.

1.4 CONTRACTOR'S SUPERINTENDENT'S FIELD OFFICE

A. Establish at site of Project.

B. Equipment: Telephone, telecopy, mailing address, and sanitary facilities.

C. Assure attendance at this office during the normal working day.

D. At this office, maintain complete field file of shop drawings, posted Contract Drawings and Specifications, and other files of field operations including provisions for maintaining "As Recorded Drawings."

E. Remove field office from site upon acceptance of the entire work by the Owner and City.

1.5 ”TESTING

A. Payment for Soil, Concrete and Other Testing:

1. All onsite testing and sampling will be performed in the presence of a representative of the City of Boerne.
2. Soils and concrete testing: The Owner will pay for "Passing" soils and "Passing" concrete tests on the Project.
3. Owner will pay for all required testing to establish proctor soil densities as required herein.
4. Costs of corrective action, costs of "Failing" soils and concrete tests, and cost of testing associated with establishment of mix design are the sole responsibility of the Contractor.
5. City of Boerne may require additional testing and choose locations for in place materials testing to be paid for by Owner.
6. Other testing: Required testing, testing procedures, reports, certificates, and costs associated with all phases of securing required satisfactory test information which may be required by individual sections of Specifications or Drawings are the full responsibility of the Contractor.

1.6 ORDER OF CONSTRUCTION AND CONSTRUCTION SCHEDULE

A. Construction operations will be scheduled to allow the City of Boerne uninterrupted operation of existing adjacent facilities. Coordinate connections with existing work to ensure timely completion of interfaced items.

B. At no time shall Contractor or his employees modify operation of the existing facilities or start construction modifications without approval of the City of Boerne and Owner except in emergency to prevent or minimize damage.

C. Within 10 days after award of Contract, submit for approval a critical path type schedule. Account for schedule of Subcontracts. Include proper sequence of construction, various crafts, purchasing time, shop drawing approval, material delivery, equipment fabrication, startup, demonstration, and similar time consuming factors. Show on schedule as a minimum, earliest starting, earliest completion, latest starting, latest finish, and free and total float for each task or item.

D. Evaluate schedule no less than monthly. Update, correct, and rerun schedule and submit to Engineer in triplicate with pay application to show rescheduling necessary to reflect true job conditions. When shortening of various time intervals is necessary to correct for behind schedule conditions, indicate steps to implement to accomplish work in shortest schedule. Information shall be submitted to Engineer in writing with revised schedule.

E. If Contractor does not take necessary action to accomplish work according to schedule, he may be ordered by Owner in writing to take necessary and timely action to improve work progress. Order may require increased work forces, extra equipment, extra shifts or other action as necessary. Should Contractor refuse or neglect to take such action authorized, under provisions of this contract, Owner may take necessary actions including, but not necessarily limited to, withholding of payment and termination of contract.

F. Upon receipt of approved "Work Schedule," within 10 days, submit to Engineer an estimated payment schedule by each month of project duration. Include a composite curve to show estimated value of work complete and stored materials less specified retainage. Establish key months when work will be 50, 80, 90, and 100 percent complete. During the course of work, update with new composite curves at key months or whenever variation is expected to be more than plus or minus 10 percent. Retain original or previous composite curves as dashed curves on all updates. Include a heavy plotted curve to show ACTUAL payment curve on all updates.

1.7 PROJECT MEETINGS

A. The Engineer will conduct construction meetings involving:
   1. Contractor's project manager.
   2. Contractor's project superintendent.
   3. Owner's designated representative(s).
   4. Engineer's designated representative(s).

5. Contractor's subcontractors as appropriate to the work in progress.
6. Representative of the City of Boerne.

B. Meetings conducted as required by Owner.

C. The Engineer will take meeting minutes and submit copies of meeting minutes to participants and designated recipients identified at the Preconstruction Conference. Corrections, additions or deletions to the minutes shall be noted and addressed at the following meeting.

D. The Engineer will schedule meetings for most convenient time frame.

E. The Engineer will have available at each meeting full chronological file of all previous meeting minutes.

F. The Contractor shall have available at each meeting up-to-date record drawings.

1.8 SPECIAL CONSIDERATIONS

A. Contractor shall be responsible for negotiations of any waivers or alternate arrangements required to enable transportation of materials to the site.

B. Maintain conditions of access road to site such that access is not hindered as the result of construction related deterioration.

1.9 HISTORICAL AND ARCHAEOLOGICAL

A. If during the course of construction, evidence of deposits of historical or archaeological interest is found, the Contractor shall cease operations affecting the find and shall notify the Owner. No further disturbance of the deposits shall ensue until the Contractor has been notified by the Owner that Contractor may proceed. The Owner will issue a Notice to Proceed only after The Texas Historical Commission has surveyed the find and made a determination to the Owner. Compensation to the Contractor, if any, for lost time or changes in construction resulting from the find, shall be determined in accordance with changed or extra work provisions of the Contract Documents."

PART 2 - PRODUCTS - (NOT APPLICABLE TO THIS SECTION)

PART 3 - EXECUTION - (NOT APPLICABLE TO THIS SECTION)

END OF SECTION

SECTION 01340
SUBMITTALS

PART 1 - GENERAL

1.1 SUMMARY

A. Section Includes:
   1. Mechanics and administration of the submittal process for:
      a. Shop drawings.
      b. Samples.
      c. Miscellaneous submittals.
      d. Operation and maintenance manuals.

B. Related Sections include but are not necessarily limited to:
   1. Division 0 - Bidding Requirements, Contract Forms, and Conditions of the Contract.
   2. Division 1 - General Requirements.
   3. Sections in Divisions 2 through 16 identifying required submittals.

1.2 DEFINITIONS

A. Shop Drawings:
   1. All drawings, diagrams, illustrations, schedules, and other data or information which are specifically prepared or assembled by or for CONTRACTOR and submitted by CONTRACTOR to illustrate some portion of the Work..
   2. Product data and samples are Shop Drawing information.

B. Miscellaneous Submittals:
   1. Submittals other than Shop Drawings:
   2. Representative types of miscellaneous submittal items include but are not limited to:
      a. Construction schedule.
      b. Concrete, soil compaction, and pressure test reports.
      c. HVAC test and balance reports.
      d. Installed equipment and systems performance test reports.
      e. Manufacturer's installation certification letters.
      f. Instrumentation and control commissioning reports.
      g. Warranties.
      h. Service agreements.
      i. Construction photographs.
      j. Survey data.
      k. Cost breakdown (Schedule of Values).

1.3 TRANSMITTALS

A. Shop Drawings, Samples and Operation and Maintenance Manuals:
   1. Transmit all submittals to Engineer.
   2. Utilize two copies of attached Exhibit "A" to transmit all shop drawings and samples.
   3. Utilize two copies of attached Exhibit "B" to transmit all Operation and Maintenance Manuals.
   4. All transmittals must be from Contractor and bear his approval stamp. Transmittals will not be received from or returned to subcontractors, or suppliers.
      a. Shop drawing transmittal stamp shall read "(Contractor's Name) has satisfied Contractor's obligations under the Contract Documents with respect to Contractor's review and approval as stipulated under the General Conditions". Transmittals will not be received from or returned to subcontractors.

b. Operation and Maintenance Manual transmittal stamp may be Contractor's standard approval stamp.

5. Provide submittal information defining specific equipment or materials utilized on the project. Generalized product information not clearly defining specific equipment or materials to be provided will be rejected.
6. Calculations required in individual specification sections will be received for information purposes only and will be returned stamped "Engineer's Review Not Required" to acknowledge receipt.
7. Engineer will transmit copies to the City of Boerne after reviewing and stamping.
8. Submittal schedule:
   a. Schedule of shop drawings:
      1) Submitted and approved within 20 days of receipt of Notice to Proceed.
      2) Account for multiple transmittals under any specification section where partial submittals will be transmitted.
   b. Shop drawings:
      1) Submittal and approval prior to 50 percent completion.
   c. Operation and Maintenance Manuals and Equipment Record Sheets:
      1) Initial submittal within 60 days after date shop drawings are approved.

B. Miscellaneous Submittals:
1. Transmit under Contractor's standard letter of transmittal or letterhead.
2. Submit in triplicate or as specified in individual specification section.
3. Transmit to Engineer.
4. Provide carbon copy of letter of transmittal to City of Boerne.
   a. Exception for concrete, soils compaction and pressure test reports.
      1) Transmit one copy to City of Boerne.

1.4 PREPARATION OF SUBMITTALS

A. Shop Drawings:
1. Scope of any letter of transmittal:
   a. Limited to one Specification Section.
   b. Do not submit under any Specification Section entitled (in part) "Basic Requirements".
2. Numbering letter of transmittal:
   a. Include as prefix the specification section number followed by "-xx" beginning with "01".
   b. If more than one submittal under any specification section, number transmittals consecutively.
3. Describing transmittal contents:
   a. Provide listing of each component or item in submittal capable of receiving an independent review action.
   b. Identify for each item:
      1) Manufacturer and Manufacturer's drawing or data number.
      2) Contract Document tag number(s).
      3) Contract Drawing Section or detail number if appropriate.
      4) Specification Article/Paragraph number if appropriate.
4. Resubmittals:
   a. Number with original root number and a suffix letter starting with "A" on a (new) duplicate transmittal form.
   b. Do not increase the scope of any prior transmittal.
   c. Account for all components of prior transmittal.
      1) If items in prior transmittal received "A" or "B" Action code, list them and indicate "A" or "B" as appropriate.
         a) Do not include submittal information for items with prior "A" or "B" Action in transmittal.
      2) Indicate "Outstanding-To Be Resubmitted At a Later Date" for any prior "C" or "D" Action item not included in resubmittal.

a) Obtain Engineer's prior approval to exclude items.

5. For 8-1/2 x 11 IN size sheets, provide four copies of each page for Engineer plus the number required by the Contractor. The number of copies required by the Contractor will be defined at the Preconstruction Conference, but shall not exceed 10.
6. For items not covered in paragraph 1.4-A.5 submit one reproducible transparency and one print of each drawing until approval is obtained. Utilize mailing tube; do not fold. The Engineer will mark and return the reproducible to the Contractor for his reproduction and distribution. Submit four copies of approved reproducible to Engineer.
7. Provide clear space (3 IN SQ) for Engineer and (3 IN SQ) for City of Boerne stamping of each component defined in 1.4-A.4.
8. Contractor shall not use red color for marks on transmittals. Duplicate all marks on all copies transmitted, and ensure marks are photocopy reproducible. Outline Contractor marks on reproducible transparencies with a rectangular box.
9. Transmittal contents:
   a. Coordinate and identify shop drawing contents so that all items can be easily verified by the Engineer.
   b. Identify equipment or material use, tag number, drawing detail reference, weight, and other project specific information.
   c. Provide sufficient information together with technical cuts and technical data to allow an evaluation to be made to determine that the item submitted is in compliance with the Contract Documents.
   d. Submit items like equipment brochures, cuts of fixtures, product data sheets or catalog sheets on 8-1/2 x 11 IN pages. Indicate exact item or model and all options proposed.
   e. Include legible scale details, sizes, dimensions, performance characteristics, capacities, test data, anchoring details, installation instructions, storage and handling instructions, color charts, layout drawings, parts catalogs, rough-in diagrams, wiring diagrams, controls, weights and other pertinent data. Arrange data and performance information in format similar to that provided in Contract Documents. Provide, at minimum, the detail provided in the Contract Documents.
   f. If proposed equipment or materials deviate from the Contract Drawings or Specifications in any way, clearly note the deviation and justify the said deviation in detail in a separate letter immediately following transmittal sheet.

B. Samples:
   1. Identification:
      a. Identify sample as to transmittal number, manufacturer, item, use, type, project designation, tag number, Standard Specification section or drawing detail reference, color, range, texture, finish and other pertinent data.
      b. If identifying information cannot be marked directly on sample without defacing or adversely altering samples, provide a durable tag with identifying information securely attached to the sample.
   2. Include application specific brochures, and installation instructions.
   3. Provide Contractor's stamp of approval on samples or transmittal form as indication of Contractor's checking and verification of dimensions and coordination with interrelated work.
   4. Resubmit samples of rejected items.

C. Operation and Maintenance Manuals:
   1. Number transmittals for Operation and Maintenance Manual with original root number of the approved shop drawing for the item.
   2. Submit two copies until approval is received.
   3. Identify resubmittals with the original number plus a suffix letter starting with "A."
   4. Submit Operation and Maintenance Manuals printed on 8-1/2 x 11 IN size heavy first quality paper with standard three-hole punching and bound in stiff metal hinged binder constructed as a three-ring style. Provide binders with titles on front and on spine of binder. Tab each section of manuals for easy reference with plastic-coated dividers. Provide index for each manual. Provide plastic sheet lifters prior to first page and following last page.

5. Reduce drawings or diagrams bound in manuals to an 8-1/2 x 11 IN or 11 x 17 IN size. However, where reduction is not practical to ensure readability, fold larger drawings separately and place in vinyl envelopes which are bound into the binder. Identify vinyl envelopes with drawing numbers.
6. Transmittal Content:
   a. Submission of Operation and Maintenance Manuals is applicable but not necessarily limited to:
      1) Major equipment.
      2) Equipment used with electrical motor loads of 1/6 HP nameplate or greater.
      3) Specialized equipment including valves and instrumentation and control system components for HVAC and process systems such as meters, recorders, and transmitters.
      4) Valves greater than 12 IN DIA.
      5) Water control gates.
   b. Operation and maintenance manuals shall include, but not necessarily be limited to, the following detailed information, as applicable:
      1) Equipment function, normal operating characteristics, limiting operations.
      2) Assembly, disassembly, installation, alignment, adjustment, and checking instructions.
      3) Operating instructions for start-up, routine and normal operation, regulation and control, shutdown, and emergency conditions.
      4) Lubrication and maintenance instructions.
      5) Guide to "troubleshooting."
      6) Parts list and predicted life of parts subject to wear.
      7) Outline, cross-section, and assembly drawings; engineering data; and electrical diagrams, including elementary diagrams, wiring diagrams, connection diagrams, word description of wiring diagrams and interconnection diagrams.
      8) Test data and performance curves.
      9) A list of recommended spare parts with a price list and a list of spare parts provided under these specifications.
      10) Copies of installation instructions, parts lists or other documents packed with equipment when delivered.
      11) Instrumentation or tag numbers relating the equipment back to the Contract Documents.
      12) Include a filled-out copy of the Equipment Record Sheet, Exhibits C1 and C2 as the first page(s) of each Operation and Maintenance Manual. Complete maintenance requirements in detail. Simple reference to the Manual is not acceptable.
      13) For equipment items involving components or subunits, an Equipment Record Sheet for each operating component or subunit is required.

1.5 REVIEW ACTION

A. Shop Drawings and Samples:
   1. Items within transmittals will be reviewed for overall design intent and will receive one of the following actions by Engineer and City of Boerne:
      a. A - FURNISH AS SUBMITTED.
      b. B - FURNISH AS NOTED (BY ENGINEER and CITY OF BOERNE).
      c. C - REVISE AND RESUBMIT.
      d. D - REJECTED.
      e. E - ENGINEER'S REVIEW NOT REQUIRED.
   2. Transmittals received will be initially reviewed to ascertain inclusion of Contractor's approval stamp. Drawings not stamped by the Contractor or stamped with a stamp containing language other than that specified in Paragraph 1.3-A.4.a., will not be reviewed for technical content and will be returned without any action.

3. Transmittals returned with Action "A" or "B" are considered ready for fabrication and installation. If for any reason a transmittal that has an "A" or "B" Action is resubmitted, it must be accompanied by a letter defining the changes that have been made and the reason for the resubmittal. Destroy or conspicuously mark "SUPERSEDED" all documents having previously received "A" or "B" Action that are superseded by a resubmittal.
4. Transmittals with Action "A" or "B" combined with Action "C" (Revise and Resubmit) or "D" (Rejected) will be individually analyzed giving consideration as follows:
   a. The portion of the transmittal given "C" or "D" will not be distributed (unless previously agreed to otherwise at the Preconstruction Conference). One copy or the one transparency of the "C" or "D" drawings will be marked up and returned to the Contractor. Correct and resubmit items so marked.
   b. Items marked "A" or "B" will be fully distributed.
   c. If a portion of the items or system proposed are acceptable, however, the major part of the individual drawings or documents are incomplete or require revision, the entire submittal may be given "C" or "D" Action. This is at the sole discretion of the Engineer. In this case, some drawings may contain relatively few or no comments or the statement, "Resubmit to maintain a complete package." Distribution to the Owner and field will not be made (unless previously agreed to otherwise).
5. Failure to include any specific information specified under the submittal paragraphs of the specifications will result in the transmittal being returned to the Contractor with "C" or "D" Action.
6. Transmittals such as submittals which the Engineer or City of Boerne considers as "Not Required," submittal information which is supplemental to but not essential to prior submitted information, or items of information in a transmittal which have been reviewed and received "A" or "B" Action in a prior transmittal, will be returned with Action "E. Engineer's Review Not Required."
7. Samples may be retained for comparison purposes. Remove samples when directed. Include in bid all costs of furnishing and removing samples.
8. Approved samples submitted or constructed, constitute criteria for judging completed work. Finished work or items not equal to samples will be rejected.

B. Operation and Maintenance Manuals:
   1. Engineer and City of Boerne will review and indicate one of the following review actions:
      a. ACCEPTABLE.
      b. FURNISH AS NOTED.
      c. REVISE AND RESUBMIT.
      d. REJECTED.
   2. Acceptable submittals will be retained with the transmittal form returned with a request for five additional copies.
   3. Deficient submittals will be returned along with the transmittal form which will be marked to indicate deficient areas.

END OF SECTION

EXHIBIT A

City of Boerne
Shop Drawing Transmittal No. _____-_____

(Spec Section) (Series)

Project Name:			Date Received:		
Project Owner:			Checked By:		
Contractor:	Engineer		Log Page:		
Address:	Address:		City of Boerne No.:		
			Spec Section:		
			Drawing/Detail No.:		
Attn:	Attn:		1st. Sub		ReSub.
Date Transmitted:	Previous Transmittal Date:				

Item No.	No. Copies	Description	Manufacturer	Mfr/Vendor Dwg or Data No.	Action Taken*

Remarks:

* The Action Designated Above is in Accordance with the Following Legend:

A - Furnish as Submitted

B - Furnish as Noted

C - Revise and Submit
1. Not enough information for review.
2. No reproducibles submitted.
3. Copies illegible.
4. Not enough copies submitted.
5. Wrong sequence number.
6. Wrong resubmittal number.
7. Wrong spec. section.
8. Wrong form used.
9. See comments.

D - Rejected

E - Engineer's review not required
1. Submittal not required.
2. Supplemental Information. Submittal retained for informational purposes only.
3. Information reviewed and approved on prior submittal.
4. See comments.

Comments:

By _____ Date _____

Distribution: Contractor ☐ File ☐ City of Boerne ☐ Owner ☐ Other ☐

EXHIBIT B

City of Boerne
O&M Manual Transmittal No. _____-_____

(Spec Section) (Series)

Project Name:		Date Received:
Project Owner:		Checked By:
Contractor:	Owner:	Log Page:
Address: Attn:	Address: Attn:	City of Boerne No.:
		1st. Sub. ReSub.
Date Transmitted:	Previous Transmittal Date:	

No. Copies	Description of Item	Manufacturer	Dwg. or Data No.	Action Taken*

Remarks:

To:	From:
	Date:

* The Action designated above is in accordance with the following legend:

A -Acceptable, Provide five additional Copies

B - Furnish as Noted

C - Revise and Resubmit
This Operation and Maintenance Manual Submittal is deficient in the following area:

1. Equipment record sheets.
2. Functional description.
3. Assembly, disassembly, installation, alignment, adjustment & checkout instructions.
4. Operating instructions.
5. Lubrication & maintenance instructions.
6. Troubleshooting guide.
7. Parts list and ordering instructions.
8. Organization (index and tabbing).
9. Wiring diagrams & schematics specific to installation.
10. Outline, cross section & assembly diagrams.
11. Test data & performance curves.
12. Tag or equipment identification numbers.
13. Other - see comments.

D – Rejected

Comments:

By Date

Distribution: Contractor ☐ File ☐ City of Boerne ☐ Owner ☐ Other ☐

SECTION 01560
ENVIRONMENTAL PROTECTION AND SPECIAL CONTROLS

PART 1 - GENERAL

1.1 SUMMARY

A. Section Addresses:
   1. Minimizing the pollution of air, water, or land; control of noise, the disposal of solid waste materials, and protection of deposits of historical or archaeological interest.

B. Related Sections include but are not necessarily limited to:
   1. Division 0 - Bidding Requirements, Contract Forms, and Conditions of the Contract.
   2. Division 1 - General Requirements.

1.2 SUBMITTALS

A. Shop Drawings:
   1. See Section 01340.
   2. Prior to the start of any construction activities submit:
      a. A detailed proposal of all methods of control and preventive measures to be utilized for environmental protection.
      b. A drawing of the work area, haul routes, storage areas, access routes and current land conditions including trees and vegetation.
      c. A copy of the NPDES permit for storm water discharges from construction activities.
      d. A copy of the approved storm water pollution prevention plan.

1.3 QUALITY ASSURANCE

A. Noise of Construction Ordinance: Comply with the requirements of the City of Boerne Noise of Construction Ordinance which limits working hours. Working outside the hours listed in the ordinance is a violation of City Code and can be prosecuted in Municipal Court.

B. Oak Wilt Prevention Ordinance: Comply with all provisions of the City of Boerne Oak Wilt Prevention Ordinance.

C. State and Federal Regulations: Identify and comply with applicable regulations.

PART 2 - PRODUCTS - (NOT APPLICABLE TO THIS SECTION)

PART 3 - EXECUTION

3.1 INSTALLATION

A. Employ and utilize environmental protection methods, obtain all necessary permits, and fully observe all local, state, and federal regulations including NPDES and TPDES regulations.

B. Land Protection:
   1. Except for any work or storage area and access routes specifically assigned for the use of the Contractor, the land areas outside the limits of construction shall be preserved in their present condition. Contractor shall confine his construction activities to areas defined for work within the Contract Documents.
   2. Manage and control all borrow areas, work or storage areas, access routes and embankments to prevent sediment from entering nearby water or land adjacent to the work site.

3. Restore all disturbed areas including borrow and haul areas and establish permanent type of locally adaptable vegetative cover.
4. Unless earthwork is immediately paved or surfaced, protect all side slopes and backslopes immediately upon completion of final grading.
5. Plan and execute earthwork in a manner to minimize duration of exposure of unprotected soils.
6. Except for areas designated by the Contract Documents to be cleared and grubbed, the Contractor shall not deface, injure or destroy trees and vegetation, nor remove, cut, or disturb them without approval of the Engineer. Any damage caused by the Contractor's equipment or operations shall be restored as nearly as possible to its original condition at the Contractor's expense.

C. Surface Water Protection:
1. Utilize, as necessary, erosion control methods to protect side and backslopes, minimize and the discharge of sediment to the surface water leaving the construction site as soon as rough grading is complete. These controls shall be maintained until the site is ready for final grading and landscaping or until they are no longer warranted and concurrence is received from the Engineer. Physically retard the rate and volume of runon and runoff by:
   a. Implementing structural practices such as diversion swales, terraces, straw bales, silt fences, berms, storm drain inlet protection, rocked outlet protection, sediment traps and temporary basins.
   b. Implementing vegetative practices such as temporary seeding, permanent seeding, mulching, sod stabilization, vegetative buffers, hydroseeding, anchored erosion control blankets, sodding, vegetated swales or a combination of these methods.
   c. Providing Construction sites with graveled or rocked access entrance and exit drives and parking areas to reduce the tracking of sediment onto public or private roads.
2. Discharges from the construction site shall not contain pollutants at concentrations that produce objectionable films, colors, turbidity, deposits or noxious odors in the receiving stream or waterway.

D. Solid Waste Disposal:
1. Collect solid waste on a daily basis.
2. Provide disposal of degradable solid waste to an approved solid waste disposal site.
3. Provide disposal of nondegradable solid waste to an approved solid waste disposal site or in an alternate manner approved by Engineer and regulatory agencies.
4. No building materials wastes or unused building materials shall be buried, dumped, or disposed of on the site.

E. Fuel and Chemical Handling:
1. Store and dispose of chemical wastes in a manner approved by regulatory agencies.
2. Take special measures to prevent chemicals, fuels, oils, greases, herbicides, and insecticides from entering drainage ways.
3. Do not allow water used in onsite material processing, concrete curing, cleanup, and other waste waters to enter a drainage way(s) or stream.
4. The Contractor shall provide containment around fueling and chemical storage areas to ensure that spills in these areas do not reach waters of the state.

F. Control of Dust:
1. The control of dust shall mean that no construction activity shall take place without applying all such reasonable measures as may be required to prevent particulate matter from becoming airborne so that it remains visible beyond the limits of construction. Reasonable measures may include paving, frequent road cleaning, planting vegetative groundcover, application of water or application of chemical dust suppressants. The use of chemical agents such as calcium chloride must be approved by the City of Boerne.
2. Utilize methods and practices of construction to eliminate dust in full observance of agency regulations.

3. The Engineer and City of Boerne will determine the effectiveness of the dust control program and may request the Contractor to provide additional measures, at no additional cost to Owner or the City.

G. Burning:
   1. Do not burn material on the site. If the Contractor elects to dispose of waste materials by burning, make arrangements for an off-site burning area and conform to all local regulations.

H. Control of Noise:
   1. Control noise by fitting equipment with appropriate mufflers.

I. Completion of Work:
   1. Upon completion of work, leave area in a clean, natural looking condition.
   2. Ensure all signs of temporary construction and activities incidental to construction of required permanent work are removed.

END OF SECTION

SECTION 01600
PRODUCT DELIVERY, STORAGE, AND HANDLING

PART 1 - GENERAL

1.1 SUMMARY

A. Section Includes:
   1. Scheduling of product delivery.
   2. Packaging of products for delivery.
   3. Protection of products against damage from:
      a. Handling.
      b. Exposure to elements or harsh environments.

B. Related Sections include but are not necessarily limited to:
   1. Division 0 - Bidding Requirements, Contract Forms, and Conditions of the Contract.
   2. Division 1 - General Requirements.

C. Payment:
   1. No payment will be made to Contractor for equipment or materials not properly stored and insured or without approved shop drawings and Submittals.
      a. Previous payments for items will be deducted from subsequent progress estimate(s) if proper storage procedures are not observed.

1.2 DELIVERY

A. General: Do not deliver construction materials to the jobsite until submittals for the materials have been approved.

B. Scheduling:
   1. Schedule delivery of products or equipment as required to allow timely installation and to avoid prolonged storage.

C. Packaging:
   1. Deliver products or equipment in manufacturer's original unbroken cartons or other containers designed and constructed to protect the contents from physical or environmental damage.

D. Identification:
   1. Clearly and fully mark and identify as to manufacturer, item, and installation location.

E. Protection and Handling:
   1. Provide manufacturer's instructions for storage and handling.

PART 2 - PRODUCTS - (NOT APPLICABLE TO THIS SECTION)

PART 3 - EXECUTION

3.1 PROTECTION, STORAGE AND HANDLING

A. Manufacturer's Instruction:
   1. Protect all products or equipment in accordance with manufacturer's written directions.
      a. Store products or equipment in location to avoid physical damage to items while in storage.

b. Handle products or equipment in accordance with manufacturer's recommendations and instructions.

2. Protect equipment from exposure to elements and keep thoroughly dry.
3. When space heaters are provided in equipment, connect and operate heaters during storage and until equipment is placed in service.

3.2 FIELD QUALITY CONTROL

A. Inspect Deliveries:
   1. Inspect all products or equipment delivered to the site prior to unloading. Reject all products or equipment that are damaged, used, or in any other way unsatisfactory for use on Project.

B. Monitor Storage Area:
   1. Monitor storage area to ensure suitable temperature and moisture conditions are maintained.

END OF SECTION

SECTION 01601
JOB CONDITIONS

PART 1 - GENERAL

1.1 SUMMARY

A. Section Includes:
   1. Job conditions.

B. Related Sections include but are not necessarily limited to:
   1. Division 0 - Bidding Requirements, Contract Forms, and Conditions of the Contract.
   2. Division 1 - General Requirements.

1.2 PROJECT CONDITIONS

A. Prior to installation of material, equipment and other work, verify with Subcontractors, material or equipment manufacturers, and installers that the substrate or surface to which those materials attach is acceptable for installation of those materials or equipment. (Substrate is defined as building surfaces to which materials or equipment is attached to i.e., floors, walls, ceilings, etc.).

B. Correct unacceptable substrate until acceptable for installation of equipment or materials.

C. {Insert Description of project specific site conditions Contractor will need to know to accurately bid and construct project}

END OF SECTION

SECTION 01710
CLEANING

PART 1 - GENERAL

1.1 SUMMARY

A. Section Includes:
   1. Intermediate and final cleaning of Work not including special cleaning of closed systems specified elsewhere.

B. Related Sections include but are not necessarily limited to:
   1. Division 0 - Bidding Requirements, Contract Forms, and Conditions of the Contract.
   2. Division 1 - General Requirements.

1.2 STORAGE AND HANDLING

A. Store cleaning products and cleaning wastes in containers specifically designed for those materials.

1.3 SCHEDULING

A. Schedule cleaning operations so that dust and other contaminants disturbed by cleaning process will not fall on newly painted surfaces.

PART 2 - PRODUCTS

2.1 MATERIALS

A. Cleaning Agents:
   1. Compatible with surface being cleaned.
   2. New and uncontaminated.
   3. For Manufactured Surfaces: Material recommended by manufacturer.

PART 3 - EXECUTION

3.1 CLEANING - GENERAL

A. Prevent accumulation of wastes that create hazardous conditions.

B. Conduct cleaning and disposal operations to comply with laws and safety orders of governing authorities.

C. Do not dispose of volatile wastes such as mineral spirits, oil, or paint thinner in storm or sanitary drains or sewers.

D. Dispose of degradable debris at an approved solid waste disposal site.

E. Dispose of non-degradable debris at an approved solid waste disposal site or in an alternate manner approved by Engineer and regulatory agencies.

F. Handle materials in a controlled manner with as few handlings as possible.

G. Do not drop or throw materials from heights greater than 4 FT or less than 4 FT if conditions warrant greater care.

H. On completion of work, leave area in a clean, natural looking condition. Remove all signs of temporary construction and activities incidental to construction of required permanent Work.

I. Do not burn on-site.

3.2 INTERIOR CLEANING

A. Cleaning During Construction:
   1. Keep work areas clean so as not to hinder health, safety or convenience of personnel in existing facility operations.
   2. At maximum weekly intervals, dispose of waste materials, debris, and rubbish.
   3. Vacuum clean interior areas when ready to receive finish painting. Continue vacuum cleaning on an as-needed basis, until substantial completion.
   4. Control dust in work areas of existing facilities.
      a. Provide protection to existing electrical and mechanical equipment as required to eliminate detrimental effects due to construction.
      b. At maximum monthly intervals, check interior of existing electric panels and vacuum if dust accumulation has occurred.
      c. At maximum weekly intervals, sweep all floors, including basins, tunnels, platforms, walkways, and pick up and dispose of all debris. Use dust suppressant sweeping compound in areas open to areas of existing facility operations.

B. Final Cleaning:
   1. Remove grease, mastic, adhesives, dust, dirt, stains, fingerprints, labels, and other foreign materials from sight-exposed surfaces.
   2. Wipe all lighting fixture reflectors, lenses, lamps and trims clean.
   3. Polish glossy surfaces to a clear shine.
   4. Replace all burned out lamps.
   5. Broom clean floors.

3.3 EXTERIOR (SITE) CLEANING

A. Cleaning During Construction:
   1. Construction debris:
      a. Confine in strategically located container(s):
         1) Cover to prevent blowing by wind.
         2) Haul from site minimum once a week.
      b. Remove from work area to container daily.
   2. Vegetation:
      a. Keep weeds and other vegetation trimmed to 3 IN maximum height.
   3. Soils, sand, and gravel deposited on paved areas and walks:
      a. Remove as required to prevent muddy or dusty conditions.
      b. Do not flush into storm sewer system.

B. Final Cleaning:
   1. Remove trash and debris containers from site:
      a. Re-seed areas disturbed by location of trash and debris containers.
   2. Clean paved roadways, curbs, sidewalks and driveways.

3.4 FIELD QUALITY CONTROL

A. Immediately prior to Substantial Completion, conduct an inspection with City of Boerne to verify condition of all work areas.

END OF SECTION

SECTION 01800
OPENINGS AND PENETRATIONS IN CONSTRUCTION

PART 1 - GENERAL

1.1 SUMMARY

A. Section Includes:
   1. All openings and penetrations in construction.

B. Related Sections include but are not necessarily limited to:
   1. Division 0 - Bidding Requirements, Contract Forms, and Conditions of the Contract.
   2. Division 1 - General Requirements.
   3. Section 09905 - Painting and Protective Coatings.

1.2 QUALITY ASSURANCE

A. Referenced Standards:
   1. American Concrete Institute (ACI):
      a. 318, Building Code Requirements for Structural Concrete.
   2. American Society for Testing and Materials (ASTM):
      a. A36, Standard Specification for Carbon Structural Steel.
      b. A53, Standard Specification for Pipe, Steel, Black and Hot-Dipped, Zinc-Coated Welded and Seamless.
      c. C920, Standard Specification for Elastomeric Joint Sealants.
   3. National Fire Protection Association (NFPA):
      a. 70, National Electrical Code (NEC).
      b. 90A, Standard for Installation of Air Conditioning and Ventilating Systems.
   4. Sheet Metal and Air Conditioning Contractors National Association, Inc.(SMACNA).

B. Obtain prior approval from Engineer when any opening larger than 100 SQ IN must be made in existing or newly completed construction.

1.3 DEFINITIONS

A. Hazardous Areas: Areas shown in the Contract Documents as having Class I or Class II area classifications.

B. Washdown Areas: Areas having floor drains or hose bibs.

1.4 SUBMITTALS

A. Shop Drawings:
   1. See Section 01340.
   2. For each structure provide dimensioned or scaled (minimum 1/8 IN = 1 FT) plan view drawings containing the following information:
      a. Vertical and horizontal location of all required openings and penetrations.
      b. Size of all openings and penetrations.
      c. Opening type.
      d. Seal type.
   3. Manufacturer's installation instructions for standard manufactured products.

1.5 PROJECT CONDITIONS

A. For purposes of this Project, water table level is indicated on the plans.

PART 2 - PRODUCTS

2.1 MATERIALS

A. Pipe Sleeves: Steel, ASTM A53, Schedule 40, black.

B. Pipe Sleeves Penetrating into Corrosive Areas: Stainless steel.

C. Backing Rod: Closed cell polyethylene, polyethylene jacketed polyurethane foam, or other flexible, nonabsorbent, non-bituminous material recommended by sealant manufacturer to:
   1. Control joint depth.
   2. Break bond of sealant at bottom of joint.
   3. Provide proper shape of sealant bead.

D. Polysulfide Rubber Sealant:
   1. One or two component.
   2. Meet ASTM C920.

E. Polyurethane Sealant:
   1. One or two component.
   2. Paintable.
   3. Meet ASTM C920 types or Type M, Grade NS or P, Class 25, Use NT, T, M, A and O.

F. Modular Mechanical Seals:
   1. Acceptable Manufacturers.
      a. Thunderline Link-Seal.
   2. 316 stainless steel bolts, nuts and washers.

G. Sheet Metal Sleeves: Steel, ASTM A36, 12 GA.

H. Commercial Wall Castings:
   1. For Unclassified Areas both sides of penetration:
      a. Ductile Iron, class equal to connecting piping system.
   2. For Wet/Corrosive Areas either side of penetration:
      a. Stainless Steel, 304L.

PART 3 - EXECUTION

3.1 INSTALLATION AND APPLICATION

A. Perform HVAC penetrations in accordance with NFPA 90A.

B. Perform electrical penetrations in accordance with NFPA 70, Article 501.

C. Install sleeves and castings in accordance with ACI 318, Chapter #6.

D. Hot dip galvanize (or paint in accordance with Section 09905) all steel sleeves installed.

E. When mechanical or electrical work cannot be installed as structure is being erected, provide and arrange for building-in of boxes, sleeves, insets, fixtures or devices necessary to permit installation later. Lay out chases, holes or other openings which must be provided in masonry, concrete or other work.

F. Where pipes, conduits or ducts pass through newly constructed floors in washdown areas, cast sleeves with top 3 IN above finish floors. In non-washdown areas, cast sleeves with ends flush with finished surfaces.

G. Size sleeves, blockouts and cutouts which will receive sealant seal such that free area to receive sealant is minimized and seal integrity may be obtained.

H. For insulated piping and ducts, size sleeves, blockouts and cutouts large enough to accommodate full thickness of insulation.

I. Do not cut into or core drill any beams, joists, or columns.

J. Do not install sleeves in beams, joists, or columns.

K. Do not install recesses in beams, joists, columns, or slabs.

L. Field Cutting and Coring:
   1. Saw or core drill with non-impact type equipment.
   2. Mark opening and drill small 3/4 IN or less holes through structure following opening outline.
   3. Sawcut opening outline on both surfaces. Knock out within sawcuts using impact type equipment. Do not chip or spall, face of surface to remain intact. Do not allow any overcut with saw kerf.

M. Precast-Prestressed Concrete Construction:
   1. Do not cut openings nor core drill vertically or horizontally through stems of members.
   2. Do not locate or install sleeves or recess sleeves vertically or horizontally through or in stems of members.
   3. Cast openings and sleeves into flanges of units.
   4. Cast openings larger than 6 IN in diameter or 6 IN maximum dimension in units at time of manufacture.
   5. Cast openings smaller than 6 IN in diameter or 6 IN maximum dimensions in flanges of units at time of manufacture or field cut.

N. Where alterations are necessary or where new and old work join, restore adjacent surfaces to their condition existing prior to start of work.

O. Provide waterstop plate/anchor flange for piping, ducts, castings and sleeves cast-in-place in concrete.
   1. For fabricated units, weld plate to sleeve, pipe, or ductwork.
   2. For commercial castings, cast water stop/anchor with wall pipe.
   3. Plate is to be same thickness as sleeve, pipe, casting or ductwork.
   4. For fabricated units, diameter of plate or flange to be 4 IN larger than outside diameter of sleeve, pipe or ductwork.
   5. For commercial castings, waterstop/anchor size to be manufacturer standard.
   6. Provide continuous around entire circumference of sleeve, pipe, or ductwork.

P. Where area is blocked out to receive sheet metal sleeve at later date:
   1. If blockout size is sufficient to allow placement, utilize dowels for interface of initially placed concrete and sleeve encasement concrete which is placed later.
      a. Size blockout based on sleeve size required plus 4 to 6 IN each side of sleeve for concrete encasement.
      b. Provide #4 dowels at 12 IN spacing along each side of blockout with minimum of two dowels required per side.
   2. If blockout size is not sufficient to allow placement of dowels, provide keyway along all sides of blockout.
      a. Size blockout based on sleeve size required plus 2 to 4 IN each side of sleeve for concrete encasement.

Q. For interior wall applications where backer rod and sealant are specified, provide backer rod and sealant at each side of wall.

R. Use full depth expanding foam sealant for seal applications into hazardous areas and applications where multiple pipes, conduits, etc. pass through single sleeve. Use full depth compressible sealant for applications involving single components passing through sleeves and for penetrations into non hazardous area.

S. Do not make duct or conduit penetrations below high water levels when entering or leaving tankage, wet wells, or other water holding structures.

T. Modular Mechanical Seals:

1. Utilize one seal for concrete thickness less than 8 IN and two seals for concrete, 8 IN thick or greater.
2. Utilize two seals for piping 16 IN diameter and larger if concrete thickness permits.
3. Install seals such that bolt heads are located on the most accessible side of the penetration.

U. Backer Rod and Sealant:
1. Provide backer rod and sealant for modular mechanical seal applications. Apply on top side of slab penetrations and on interior, dry side wall penetrations.

3.2 SCHEDULES

A. General Schedule of Penetrations through Floors, Roofs, Foundation Base Slabs, Foundation Walls, Foundation Footings, Partitions and Walls for Ductwork, Piping, and Conduit:
1. Provide the following opening and penetration types:
   a. Type A - Block out 2 IN larger than outside dimensions of duct, pipe, or conduits.
   b. Type B - Saw cut opening. Place new concrete with integrally cast sheet metal or pipe sleeve.
   c. Type C - Fabricated sheet metal sleeve or pipe sleeve cast-in-place. Provide pipe sleeve with water ring for wet and/or washdown areas.
   d. Type D - Commercial type casting or fabrication.
   e. Type E - Saw cut opening. Place new concrete with integrally cast pipe, duct or conduit spools.
   f. Type F - Integrally cast pipe, duct or conduit.
   g. Type G - Saw cut and remove area 1 IN larger than outside dimensions of duct, pipe or conduit.
   h. Type H - Core drill.
   i. Type I - Block out area. At later date, place new concrete with integrally cast sheet metal or pipe sleeve.
2. Provide seals of material and method described as follows.
   a. Category 1 - Modular Mechanical Seal.
   b. Category 2 - Roof curb and flashing according to SMACNA specifications unless otherwise noted on Drawings.
   c. Category 3 - 12 GA sheet metal drip sleeve set in bed of silicon sealant with backing rod and sealant used in sleeve annullus.
   d. Category 4 - Backer rod and sealant.
   e. Category 5 - Full depth compressible sealant with escutcheons on both sides of opening.
   f. Category 6 - Full depth compressible sealant and flanges on both sides of opening. Flanges constructed of same material as duct, fastened to duct and minimum 1/2 IN larger than opening.
   g. Category 7 - Full depth compressible sealant and finish sealant or full depth expanding foam sealant depending on application.
3. Furnish openings and sealing materials through new floors, roofs, partitions and walls in accordance with Schedule A, Openings and Penetrations for New Construction.
4. Furnish openings and sealing materials through existing floors, roofs, partitions and walls in accordance with Schedule B, Openings and Penetrations for Existing Construction.

SCHEDULE A. OPENINGS AND PENETRATIONS SCHEDULE
FOR NEW CONSTRUCTION

	DUCTS		PIPING		CONDUIT	
APPLICATIONS	OPENING TYPE	SEAL CATEGORY	OPENING TYPE	SEAL CATEGORY	OPENING TYPE	SEAL CATEGORY
Through floors with bottom side a hazardous location	C F I	7 Not Req 7	D F I(1)	Not Req Not Req 7	C F	7 Not Req
Through floors on grade above water table	C F I	4 Not Req 4	C F I(1)	7 or 1 Not Req 7 or 1	C F I(1)	4 Not Req 7
Through slab on grade below water table	F	Not Req	F	Not Req	F	Not Req
Through floors in washdown areas	C I	4 4	C H(2) I(1)	1 3,1 1	F H(2) I(1)	Not Req 3,1 7
Through walls where one side is a hazardous area	C F I	7 Not Req 7	D F I(1	Not Req Not Req 7	C F	7 Not Req
Through exterior wall below grade above water table	C F I	7 Not Req 7	C D F I(1	1 Not Req Not Req 1	F I(1	Not Req 7
Through wall from tankage or wet well to dry well or dry area	C F I	7 Not Req 7	C D F	1 Not Req Not Req	C F H(2) I(1	7 Not Req 7 7
Through exterior wall above grade	A B C	6 6 6	A B D H(2)	5 5 Not Req 5	C H(2)	5 4
Roof penetrations	A	2	A	2	A	2
Through interior walls and slabs not covered by the above applications	A C	4 4	A C	4 4	A C F	4 4 Not Req

SCHEDULE B. OPENINGS AND PENETRATIONS SCHEDULE FOR EXISTING CONSTRUCTION

	DUCTS		PIPING		CONDUIT	
APPLICATIONS	OPENING TYPE	SEAL CATEGORY	OPENING TYPE	SEAL CATEGORY	OPENING TYPE	SEAL CATEGORY
Through floors with bottom side a hazardous location	B E	7 Not Req	B(1) E(3) H(2)	7 Not Req 7	B(1) E(3) H(2)	7 Not Req 7
Through floors on grade above water table	B E	7 Not Req	B E H(2)	7 Not Req 7	B E H(2)	7 Not Req 7
Through slab on grade below water table	E	Not Req	E	Not Req	E	Not Req
Through floors in washdown areas	G	3	G H(2)	3 3,7	G H(2)	3 3,7
Through walls where one side is in hazardous area	B E	7 Not Req	B(1) B(3) E H(2)	7 1 Not Req 7	B(1)(3) E H(2)	7 Not Req 7
Through exterior wall below grade above water table	B	7	B(1) B(3) H(2)	7 1 7	B(1)(3) H(2)	7 7
Through wall from tankage or wet well to dry well or dry area	B E	7 Not Req	B E H(2)	1 Not Req 7	B(1)(3) E H(2)	7 Not Req 7
Through exterior wall above grade	G	6	G(1)(3) H(2)	5 5	G(1)(3) H(2)	5 7
Roof penetrations	G	2	G(1)(3) H(2)	2	G	2
Roof Penetrations	G	2	G	2	G	2
Through interior walls and slabs not covered by the above applications.	G	4	G(1)(3) H(2)	4 4	G(1)(3) H(2)	4 4

(1) Multiple piping 3 IN and smaller or multiple conduits.
(2) Single piping 3 IN and smaller or single conduit.
(3) Single pipe or conduit larger than 3 IN.

END OF SECTION

City of Boerne

DIVISION 2

SECTION 02072
DEMOLITION, CUTTING AND PATCHING

PART 1 - GENERAL

1.1 SUMMARY

A. Section Includes:
   1. Demolition, cutting and patching of existing construction where shown on Drawings, or as required to accommodate new work shown or specified.

B. Related Sections include but are not necessarily limited to:
   1. Division 0 - Bidding Requirements, Contract Forms, and Conditions of the Contract.
   2. Division 1 - General Requirements.
   3. Section 03002 - Concrete.
   4. Section 09905 - Painting and Protective Coatings.

1.2 SUBMITTALS

A. Shop Drawings:
   1. See Section 01340.
   2. Indicating manufacturer and type of:
      a. Proposed nonshrink grout.
      b. Epoxy bonding adhesive.
      c. Proposed materials and methods to be used for matching and repairing existing construction.

1.3 DELIVERY, STORAGE, AND HANDLING

A. General:
   1. Salvage items, designated for Owner's salvage, as a functional unit.
   2. Clean, list and tag for storage.
   3. Protect from damage and deliver to location designated.
   4. Salvage each item with auxiliary or associated equipment required for operation.

1.4 PROJECT CONDITIONS

A. Perform preliminary investigations as required to ascertain extent of work.

1.5 SEQUENCING AND SCHEDULING

A. Coordinate and reschedule work as required to preclude interference with other operations.

B. Cooordinate discontinuance of utilities with applicable utility company prior to demolition.

1.6 PERMITS

A. Obtain City of Boerne Demolition Permit prior to demolishing existing structures.

PART 2 - PRODUCTS

2.1 ACCEPTABLE MANUFACTURERS

A. Subject to compliance with the Contract Documents, the following manufacturers are acceptable:
   1. Nonshrink grout:
      a. Supreme Grout by Gifford Hill.

b. Masterflow 713 by Master Builders.
c. Sika Grout 212 by Sika.

2. Epoxy bonding adhesive:
   a. Euco No.452 MV by Euclid Chemical Co.
   b. Sikadur 32, Hi-Mod by Sika Corporation.

B. Submit requests for substitution in accordance with Specification Section 01640.

2.2 MATERIALS

A. Temporary Partitions:
1. Plywood: 1/2 IN minimum for interior or exterior use.
2. Paneling: 1/4 IN minimum for interior use.

B. Nonshrink Grout:
1. Nonmetallic, noncorrosive and nonstaining.
2. Premixed with only water to be added in accordance with manufacturer's instructions at jobsite.
3. Grout to produce a positive but controlled expansion. Mass expansion not to be created by gas liberation or by other means.
4. Minimum compressive strength at 28 days to be 6500 psi.
5. Coat exposed edges of grout with a cure/seal compound recommended by grout manufacturer.

C. Epoxy Bonding Adhesive:
1. Two component, moisture insensitive adhesive manufactured for the purpose of bonding fresh concrete to hardened concrete.

PART 3 - EXECUTION

3.1 PREPARATION

A. Provide temporary partitions as required in public areas.
1. Construct partitions of braced plywood in exterior areas.
2. Adequately braced paneling may be used in interior areas.

B. Provide covered passageways where necessary to ensure safe passage of persons in or near areas of work.

C. Provide substantial barricades and safety lights as required.

D. Provide temporary dustproof partitions where indicated or necessary.
1. Prevent infiltration of dust into occupied areas.

E. Provide temporary weather protection as necessary.

3.2 INSTALLATION

A. Cutting and Removal:
1. Remove existing work indicated to be removed, or as necessary for installation of new work.
2. Neatly cut and remove materials, and prepare all openings to receive new work.
3. Remove masonry or concrete in small sections.

B. Modification of Existing Concrete:
1. Where indicated, remove existing concrete and finish remaining surfaces as specified in Section 03002.
   a. Protect remaining concrete from damage.
   b. Make openings by sawing through the existing concrete.

c. Concrete may be broken out after initial saw cuts in the event concrete thickness prevents cutting through.
d. Where sawing is not possible, make openings by drilling holes around perimeter of opening and then chipping out the concrete.
1) Holes shall be sufficient in number to prevent damage to remaining concrete.

2. Oversize required openings in existing concrete 1 IN on all sides and build back to required opening size by means of nonshrink grout epoxy bonded to the existing concrete.
3. Where oversized openings cannot be made, remove the concrete to the required opening size and cut back exposed reinforcing 1 IN from face of concrete and fill resulting holes with nonshrink grout.

C. Matching and Patching:
1. Walls, ceilings, floors or partitions:
a. Repair abutting walls, ceilings, floors or partitions disturbed by removal.
b. Match and patch existing construction disturbed during installation of new work.
2. Methods and materials:
a. Similar in appearance, and equal in quality to adjacent areas for areas or surfaces being repaired.
b. Subject to review of Engineer.

D. Salvaged Items:
1. Thoroughly dry and clean all metal surfaces.
2. Prime all bare metal in accordance with Section 09905.
3. Clean and lubricate motors and other moving parts.
4. Brace motors attached to flexible mountings until reinstallation.
5. Dispose of items or materials not designated for Owner's salvage or reuse. Promptly remove from site.
6. Do not store or sell Contractor salvaged items or materials on site.

E. Clean Up:
1. Transport debris and legally dispose of off site.

END OF SECTION

SECTION 02110
SITE CLEARING

PART 1 - GENERAL

1.1 SUMMARY

A. Section Includes:
   1. Site clearing, tree protection, stripping topsoil and demolition.

B. Related Sections include but are not necessarily limited to:
   1. Division 0 - Bidding Requirements, Contract Forms, and Conditions of the Contract.
   2. Division 1 - General Requirements.
   3. Section 02200 - Earthwork.
   4. Section 02260 - Topsoiling and Finished Grading.
   5. Section 02270 - Soil Erosion and Sediment Control.

PART 2 - PRODUCTS - (NOT APPLICABLE TO THIS SECTION)

PART 3 - EXECUTION

3.1 PREPARATION

A. Protect existing trees and other vegetation to remain against damage.
   1. Comply with City of Boerne Landscaping and Tree Protection Ordinances.
   2. Do not smother trees by stockpiling construction materials or excavated materials within drip line.
   3. Avoid foot or vehicular traffic or parking of vehicles within drip line.
   4. Provide temporary protection as required.

B. Repair or replace trees and vegetation damaged by construction operations at Contractor's expense.
   1. Repair to be performed by a qualified tree surgeon.
   2. Remove trees which cannot be repaired and restored to full-growth status.
   3. Replace with new trees of minimum 4 IN caliper.

C. Owner will obtain authority for removal and alteration work on adjoining property.

3.2 TREE TRIMMING

A. Comply with Tree Protection Ordinance and Oak Wilt Prevention Ordinance.

B. Prior to trimming disinfect saws, loppers, pruners and other equipment with bleach.

C. Perform trimming under the supervision of a qualified Arborist or Tree Surgeon.

D. Treat all wounds with appropriate tree wound protectant.

E. Remove brush from site.

3.3 SITE CLEARING

A. Topsoil Removal:
   1. Strip topsoil to depths encountered.
      a. Remove heavy growths of grass before stripping.

b. Stop topsoil stripping sufficient distance from such trees to prevent damage to main root system.
c. Separate from underlying subsoil or objectionable material.

2. Stockpile topsoil where directed.
   a. Construct storage piles to freely drain surface water.
   b. Seed or cover storage piles to prevent erosion.
3. Do not strip topsoil in wooded areas where no change in grade occurs.
4. Borrow topsoil:
   a. Reasonably free of subsoil, objects over 2 IN DIA, weeds and roots.

B. Clearing and Grubbing:
1. Clear from within limits of construction all trees not marked to remain.
   a. Include shrubs, brush, downed timber, rotten wood, heavy growth of grass and weeds, vines, rubbish, structures and debris.
2. Grub (remove) from within limits of construction all stumps, roots, root mats, logs and debris encountered.
   a. Grubbing under areas to be paved:
      1) Totally grub.
   b. Grubbing in lawn areas:
      1) In cut areas, totally grub.
      2) In fill areas, where fill is less than 3 FT totally grub ground.
      3) Where fill is 3 FT or more in depth, stumps may be left no higher than 6 IN above existing ground surface.

C. Disposal of Waste Materials:
1. Do not burn combustible materials on site.
2. Remove all waste materials from site.
3. Do not bury organic matter on site.

3.4 ACCEPTANCE

A. Upon completion of the site clearing, obtain Engineer's acceptance of the extent of clearing, depth of stripping and rough grade.

END OF SECTION

SECTION 02200
EARTHWORK

PART 1 - GENERAL

1.1 SUMMARY

A. Section Includes:
   1. Earthwork.

B. Related Sections include but are not necessarily limited to:
   1. Division 0 - Bidding Requirements, Contract Forms, and Conditions of the Contract.
   2. Division 1 - General Requirements.

1.2 QUALITY ASSURANCE

A. Referenced Standards:
   1. American Society for Testing and Materials (ASTM):
      a. C33, Standard Specification for Concrete Aggregates.
      b. D1556, Standard Test Method for Density and Unit Weight of Soil in Place by the Sand-Cone Method.
      c. D1557, Test Method for Laboratory Compaction Characteristics of Soil Using Modified Effort (56,000 ft-lbf/f(2,700 kN-m/m)).
      d. D2167, Standard Test Method for Density and Unit Weight of Soil in Place by the Rubber Balloon Method.
      e. D2487, Standard Classification of Soils for Engineering Purposes (Unified Soil Classification System.
      f. D2937, Standard Test Method for Density of Soil in Place by the Drive-Cylinder Method.
      g. D3786, Test Method for Hydraulic Bursting Strength of Knitted Goods and Nonwoven Fabrics: Diaphragm.
      h. D4253, Standard Test Methods for Maximum Index Density of Soils Using a Vibratory Table.
      i. D4254, Test Methods for Minimum Index Density of Soils and Calculation of Relative Density.
      j. D4318 Standard Test Methods for Liquid Limit, Plastic Limit, and Plasticity Index of Soils.
      k. D4355 Standard Test Method for Deterioration of Geotextiles by Exposure to Light, Moisture and Heat in a Xenon Arc Type Apparatus.
      l. D4491 Standard Test Methods for Water Permeability of Geotextiles by Permittivity.
      m. D4533 Standard Test Method for Trapezoid Tearing Strength of Geotextiles.
      n. D4632, Standard Test Method for Grab Breaking Load and Elongation of Geotextiles.
      o. D6241 Standard Test Method for Static Puncture Strength of Geotextiles and Geotextile-Related Products Using a 50-mm Probe.
      p. D6938 Standard Test Method for In-Place Density and Water Content of Soil and Soil-Aggregate by Nuclear Methods (Shallow Depth).
   2. Texas Department of Transportation (TxDOT)
      a. Departmental Material Specifications (DMS):
         1) DMS-6350, Lime and Lime Slurry.
      b. Standard Specifications for the Construction and Maintenance of Highways, Streets and Bridges:
         1) Item 247 Flexible Base.

1.3 SUBMITTALS

A. Shop Drawings:
   1. See Section 01340.
   2. Product technical data including:
      a. Acknowledgement that products submitted meet requirements of standards referenced.
      b. Manufacturer's installation instructions.
   3. Certifications.
   4. Test reports:
      a. Soils inspection and testing results.
      b. Moisture-Density relationships for all types of soil materials used.

B. Samples:
   1. Submit samples and source of fill and backfill materials proposed for use.
   2. Submit samples and source of borrow materials proposed for use.

PART 2 - PRODUCTS

2.1 MATERIALS

A. Fill and Backfill: Selected material approved by Soils Engineer from site excavation or from off site borrow.
   1. Free of large stones, chunks of concrete and asphalt, and clods.
      a. Max particle size: 4 IN when fill or backfill is 12 IN or greater in depth
      b. Max particle size: 2 ½ IN when fill or backfill is less than 12 IN in depth and when within 6 IN of a pavement base layer.
   2. Free of organic or other deleterious materials.
   3. Free of trash.
   4. USCS soil types GW, GP, GM, GC, SW, SP, SM, SC, CL, and ML per ASTM D2487.
   5. Do not use USCS soil types OL, OH or PT per ASTM D2487.
   6. USCS Soil types CH, MH per ASTM D2487 may only be used with recommendation of Soils Engineer and approval by City of Boerne.
   7. Embankments under roadways: Plasticity Index less than 20 per ASTM D4318

B. Granular Fill Under Concrete Slabs:
   1. Clean, crushed, nonporous rock, crushed or uncrushed gravel complying with ASTM C33 gradation size No.67, 3/4 IN to No.4 or
   2. Flexible Base per TxDOT Item 247: Grade 2, Type A or B

C. Granular Fill Under Concrete Slabs with Pressure Relief Valves:
   1. Drainage material: Conform to ASTM C33, Size No.67.
   2. Filter material: Conform to ASTM C33 requirements for fine aggregate.

D. Geotextile Filter Fabric:
   1. Nonwoven polypropylene fibers.
   2. Apparent opening size: 70-100 (U.S. Standard Sieve).
   3. Grab tensile strength: ASTM D4632 100 LBS minimum.
   4. Grab elongation: ASTM D4632 50% - 100%.
   5. Trapezoidal tear strength: ASTM D4533 35 LBS minimum.
   6. CBR puncture strength: ASTM D6241 300 LBS minimum.
   7. Permittivity: ASTM D4491 1.0 s^{-1} minimum.
   8. Flow rate: ASTM D4491 100 GPM/FT^2.
   9. UV Resistance: ASTM D4355 minimum 65% of strength retained at 500 HR.

E. Stone Stabilization Material:
   1. Angular Crushed stone or Crushed gravel: ASTM C33, gradation size No. 1, 3 1/2 to 1 1/2, or gradation size No. 2, 2 1/2 to 1 1/2.

F. Lime:

1. Commercial lime slurry: TxDOT DMS-6350.
2. Manufacturers: As listed on the TxDOT Material Producer List entitled “Lime”.
   a. Must be listed in the Commercial Lime Slurry category.

PART 3 - EXECUTION

3.1 PROTECTION

A. Protect existing surface and subsurface features on-site and adjacent to site as follows:
   1. Provide barricades, coverings, or other types of protection necessary to prevent damage to existing items indicated to remain in place.
   2. Protect and maintain bench marks, monuments or other established reference points and property corners. If disturbed or destroyed, replace at Contractor expense to full satisfaction of Owner and controlling agency.
   3. Verify location of utilities according to State Law and City of Boerne requirements. Omission or inclusion of utility items does not constitute non-existence or definite location. Secure and examine local utility records for location data.
      a. Take necessary precautions to protect existing utilities from damage due to any construction activity.
      b. Repair damages to utility items at Contractor’s expense.
      c. In case of damage, immediately notify Engineer and utility owner so required protective measures may be taken.
   4. Maintain free of damage, existing sidewalks, structures, and pavement, not indicated to be removed. Any item known or unknown or not properly located that is inadvertently damaged shall be repaired to original condition. All repairs to be made and paid for by Contractor.
   5. Provide full access to public and private premises, fire hydrants, street crossings, sidewalks and other points as designated by Owner to prevent serious interruption of travel.
   6. Maintain stockpiles and excavations in such a manner to prevent inconvenience or damage to structures on-site or on adjoining property.
   7. Avoid surcharge or excavation procedures which can result in heaving, caving, or slides.

B. Salvageable Items: Carefully remove items to be salvaged, and store on Owner's premises unless otherwise directed.

C. Dispose of waste materials, legally, off site. Burning, as a means of waste disposal, is not permitted.

3.2 ROADWAY AND DRAINAGE EXCAVATION AND GRADING

A. The work includes all operations in connection with excavation, borrow, embankment, rough grading, subgrade preparation and disposal of excess materials in connection with construction of roadways, drainage facilities and associated appurtenances.

B. Preparation:
   1. Stake roadway alignment and cuts before beginning excavation.
   2. Identify potential conflicts with utilities, drainage facilities, curbs, sidewalks and other roadways before beginning excavation. Refer conflicts to Engineer for resolution.
   3. Maintain horizontal and vertical control throughout excavation operations.
   4. Install erosion controls and drainage before beginning excavation.
   5. Remove and stockpile topsoil from roadway area before beginning excavation.

C. Roadway Excavation:
   1. Excavate to subgrade per the lines, grades and cross sections shown on the plans.
   2. Accept ownership of all unsuitable and excess material and dispose of material outside the limits of the project in accordance with Federal, State and Local regulations.
   3. Maintain drainage to avoid damage to roadway.

4. In earthen areas scarify subgrade to a minimum of 6 IN below finished subgrade elevations.
5. Pulverize or scarify material so that 100% passes a 2 ½ IN sieve.
6. Compact and finish subgrade to elevations shown on plans.

D. Channel Excavation:
1. Excavate channels to the lines, grades and cross sections shown on the plans.
2. Excavate to subgrade elevations and scarify and compact top 6 IN of subgrade material.
3. Accept ownership of all unsuitable or excess material and dispose of material outside the limits of the project in accordance with Federal, State and Local regulations.
4. Maintain drainage to avoid damage to channel.
5. Compact and finish subgrade to elevations shown on plans.

E. Over excavation:
1. Repair incidental over excavation in accordance with the requirements for embankment.
2. Notify Engineer when encountering unsuitable subgrade materials or unstable subgrade that pumps or will not compact properly.
3. Over excavate as directed by Engineer and place Stone Stabilization Material in place of excavated materials to construct a sound and stable subgrade.

F. Embankment
1. Construct embankments to the grade and sections shown on the plans.
2. Construct in layers approximately parallel to finished grade for full width of roadway or drainage channel.
3. Earth embankments:
   a. Distribute materials along embankment.
   b. Windrow and blade materials then mix to provide uniform materials in each layer and avoid abrupt changes in material in the embankment.
   c. Spread, water and compact in layers not exceeding 8 IN loose depth.
   d. Crushed rock, broken clean concrete may be included in the lower parts of the embankment with approval by the City of Boerne.
4. Rock embankments:
   a. Break rock into small pieces. Do not use rock greater than 2 FT in its maximum dimension. Ensure that the depth of the embankment layer is greater than the maximum dimension of any rock. Fill voids created by large rock with smaller rock during placement.
   b. Construct final layer of embankment with well graded material.
   c. Compact each layer to the specified density.
5. Protection:
   a. Protect all finished excavations and embankments by maintaining moisture in top 6 IN of excavation or embankment until covered by next layer.
   b. Protect finished work from weather by providing drainage and cover if necessary.
   c. Repair areas damaged before placement of successive layers and compact to meet specifications.

3.3 SITE EXCAVATION AND GRADING

A. The work includes all operations in connection with excavation, borrow, construction of fills and embankments, rough grading, and disposal of excess materials in connection with the preparation of the site(s) for construction of the proposed facilities.

B. Excavation and Grading: Perform as required by the Contract Drawings.
1. Contract Drawings may indicate both existing grade and finished grade required for construction of Project. Stake all units, structures, piping, roads, parking areas and walks and establish their elevations. Perform other layout work required. Replace property corner markers to original location if disturbed or destroyed.

2. Preparation of ground surface for embankments or fills: Before fill is started, scarify to a minimum depth of 6 IN in all proposed embankment and fill areas. Where ground surface is steeper than one vertical to four horizontal, plow surface in a manner to bench and break up surface so that fill material will bind with existing surface.
3. Protection of finish grade: During construction, shape and drain embankment and excavations. Maintain ditches and drains to provide drainage at all times. Protect graded areas against action of elements prior to acceptance of work. Reestablish grade where settlement or erosion occurs.

C. Borrow: Provide necessary amount of approved fill compacted to density equal to that indicated in this Specification. Include cost of all borrow material in original proposal. Fill material to be approved by Soils Engineer prior to placement.

D. Construct embankments and fills as required by the Contract Drawings:
1. Construct embankments and fills at locations and to lines of grade indicated. Completed fill shall correspond to shape of typical cross section or contour indicated regardless of method used to show shape, size, and extent of line and grade of completed work.
2. Provide approved fill material which is free from roots, organic matter, trash, frozen material, and stones having maximum dimension greater than 6 IN. Ensure that stones larger than 4 IN are not placed in upper 12 IN of fill or embankment. Do not place material in layers greater than 8 IN loose thickness. Place layers horizontally and compact each layer prior to placing additional fill.
3. Compact by sheepsfoot, pneumatic rollers, vibrators, or by other equipment as required to obtain specified density. Control moisture for each layer necessary to meet requirements of compaction.

3.4 ROCK EXCAVATION

A. All rock excavation shall be under one classification. This classification shall include solid ledge rock in its natural location that requires systematic quarrying, drilling and/or blasting for its removal and also boulders that exceed 1/2 CY in volume.

B. When rock is encountered, strip free of earth. Employ an independent surveyor to determine rock quantities before removal operation begins. In computing the volumetric content of rock excavation for payment, the pay lines shall be taken as follows:
1. For structures: 3 FT outside the exterior limits of foundations and from rock surface to 6 IN below bottom of foundations.
2. For piping and utilities: A width 18 IN wider than the outside diameter of the pipe or conduit and from rock surface to 6 IN below bottom exterior surface of the pipe or conduit.
3. For paving: 2 FT outside the exterior limits of paving and from rock surface to 6 IN below bottom of pavement subbase.

3.5 USE OF EXPLOSIVES

A. Blasting with any type of explosive is prohibited.

3.6 LIME TREATMENT

A. Preparation
1. Using an independent testing laboratory, determine the sulfate content of soils to be treated.
2. Identify soils with a plasticity index (PI) greater than 20 for lime stabilization.
3. The independent testing laboratory shall determine the lime application rate based upon the PI and sulfate content of the soils to be treated.

B. Slurry Placement
1. Distribute uniformly in successive passes over measured section of subgrade until specified lime content is reached.
2. Minimum lime content: 4% by weight.
3. Spread residue uniformly over the subgrade.

C. Mixing
   1. Begin mixing soil and lime within 6 HR of lime application.
   2. Bring moisture content of soil slightly above optimum to provide sufficient moisture for adequate chemical reaction of the lime and subgrade soils
   3. Allow mixture to mellow for 1 to 4 days.
   4. When material to be treated has a sulfate content between 3000 ppm and 7000 ppm, let materials mellow for a minimum of 7 days.
   5. Sprinkle treated materials with water during mixing and mellowing to maintain adequate moisture.
   6. After mellowing, resume mixing to achieve a homogenous, friable mixture with the following gradation:
      a. Minimum 100% passing the 1 ¾ IN sieve.
      b. Minimum 85% passing the ¾ IN sieve.
      c. Minimum 60% passing the #4 sieve.

D. Compaction
   1. Compact mixture using density control.
   2. Maintain moisture content between 1.0 percentage point below optimum and 2.0 percentage points above optimum.
   3. Roll longitudinally starting on the outer edges of the roadway and work toward the middle of the road.
      a. Overlap passes by one-half the width of the roller.
      b. On superelevated sections, start on the low side and work toward the high side.
   4. Compact to within 95% of optimum density as determined by ASTM D1557.

E. Rework
   1. Correct deficiencies in thickness, density and lime content by reworking the affected sections.
   2. If lime content is not met, add additional lime, remix and recompact subgrade.
   3. When reworking within 72 HR after completion of compaction, rework to correct deficiencies in thickness and to achieve proper density and moisture content.
   4. If more than 72 HR has passed before rework begins, add additional lime at a minimum rate equal to 25% of the original application rate.
   5. Resample to determine the optimum density and moisture content per ASTM D1557 and compact to 95% of the optimum density with moisture content between 1.0 percentage point below optimum and 2.0 percentage points above optimum.

F. Finishing
   1. Immediately after completing compaction, clip, skin or tight-blade the surface of the subgrade to final grade in conformance with plan sections lines and grades.
   2. Roll the clipped surface immediately to attain a smooth surface. Add small amounts of water as needed during rolling.
   3. Finish constructed subgrade to within 0.1 FT in cross section and to withing 0.1 FT measured in 10 FT longitudinally.

G. Curing
   1. Moisture cure by sprinkling daily to maintain moisture content of subgrade for a minimum of:
      a. Untreated material PI < 35: 2 days.
      b. Untreated material PI >35: 5 days.
   2. At the end of the curing period proof roll in the presence of a City of Boerne representative to indicate adequate curing.
   3. Membrane curing may be achieved by covering completed subgrade with an approved asphalt.
      a. Minimum rate: 0.10 GAL/SY.
      b. Maximum rate: 0.20 GAL/SY.

3.7 FIELD QUALITY CONTROL

A. Coordinate all field quality control operations.
   1. Moisture density relations, to be established by the Soils Engineer required for all materials to be compacted. Submit moisture-density relations to City of Boerne before testing in field.
   2. Extent of compaction testing will be as necessary to assure compliance with Specifications.
      a. At a minimum one test per lift per 45 SY of compacted backfill, embankment or subgrade.
   3. Give minimum of 24 HR advance notice to Soils Engineer and City of Boerne when ready for compaction or subgrade testing and inspection. All testing must be performed under observation at City of Boerne.
   4. Test for compaction and moisture content according to ASTM D1556, ASTM D2167, ASTM D6938, and ASTM D2937, as applicable.
   5. Should any compaction density test or subgrade inspection fail to meet Specification requirements, perform corrective work as necessary.
   6. Pay for all costs associated with corrective work and retesting resulting from failing compaction density tests.

3.8 COMPACTION DENSITY REQUIREMENTS

A. Obtain approval from Soils Engineer and City of Boerne with regard to suitability of soils and acceptable subgrade prior to subsequent operations.

B. Provide dewatering system necessary to successfully complete compaction and construction requirements.

C. Remove frozen, loose, wet, or soft material and replace with approved material as directed by Soils Engineer.

D. Stabilize subgrade with stone stabilization material as directed by Soils Engineer.

E. Compact cohesive soils to the specified density and within ± two percentage points of the optimum moisture content.

F. Assure by results of testing that compaction densities comply with the following requirements:
   1. Roadways and drainage:

LOCATION	**COMPACTION DENSITY**
AREAS WITHIN ROADWAY RIGHTS-OF-WAY	
Cohesive Soils	95 percent, ASTM D1557
Cohesionless Soils	80 percent relative density per ASTM D4253 and D4254
AREAS WITHIN DRAINAGE EASEMENTS AND RIGHTS-OF-WAY (not under pavement)	
Cohesive Soils	85 percent, ASTM D1557
Cohesionless Soils	60 percent relative density per ASTM D4253 and D4254
AREAS WITHIN DRAINAGE EASEMENTS AND RIGHTS-OF-WAY (under concrete pavement or other erosion protection)	
Cohesive Soils	95 percent, ASTM D1557
Cohesionless Soils	80 percent relative density per ASTM D4253 and D4254

2. Sitework:

LOCATION	COMPACTION DENSITY
UNDER PAVED AREAS, SIDEWALKS AND PIPING:	
Cohesive Soils	95 percent, ASTM D1557
Cohesionless Soils	80 percent relative density per ASTM D4253 and D4254
UNPAVED AREAS	
Cohesive Soils	85 percent, ASTM D1557
Cohesionless Soils	60 percent relative density per ASTM D4253 and D4254

3. Structures:

LOCATION	COMPACTION DENSITY
Inside of structures under foundations, under equipment support pads, under slabs-on-grade and scarified existing subgrade under fill material	95 percent, ASTM D1557
Outside structures next to walls, piers, columns and any other structure exterior member	90 percent, ASTM D1557

4. Specific areas:

LOCATION	COMPACTION DENSITY
Outside structures under equipment support foundations	95 percent, ASTM D1557
Under void forms	85 percent, ASTM D1557
Granular fill under base slabs with pressure relief valves, and under building floor slabs-on-grade	80 percent relative density per ASTM D4253 and D4254

3.9 EXCAVATION, FILLING, AND BACKFILLING FOR STRUCTURES

A. General:
1. In general, work includes, but is not necessarily limited to, excavation for structures and retaining walls, removal of underground obstructions and undesirable material, backfilling, filling, and fill, backfill, and subgrade compaction.
2. Obtain fill and backfill material necessary to produce grades required. Materials and source to be approved by Soils Engineer. Excavated material approved by Soils Engineer may also be used for fill and backfill.
3. In this Section of the Specifications, the word "foundations" includes footings, base slabs, foundation walls, mat foundations, grade beams, piers and any other support placed directly on soil.

4. In the paragraphs of this Section of the Specifications, the word "soil" also includes any type of rock subgrade that may be present at or below existing subgrade levels.

B. Excavation Requirements for Structures:
1. General. Do not commence excavation for foundations for structures until:
   a. Soils Engineer approves:
      1) The removal of topsoil and other unsuitable and undesirable material from existing subgrade.
      2) Density and moisture content of site area compacted fill material meets requirements of specifications.
      3) Site surcharge or mass fill material can be removed from entire construction site or portion thereof.
      4) Surcharge or mass fill material has been removed from construction area or portions thereof.
   b. Engineer grants approval to begin excavations.
2. Dimensions:
   a. Excavate to elevations and dimensions indicated or specified.
   b. Allow additional space as required for construction operations and inspection of foundations.
3. Removal of obstructions and undesirable materials in excavation includes, but is not necessarily limited to, removal of old foundations, existing construction, unsuitable subgrade soils, expansive type soils, and any other materials which may be concealed beneath present grade, as required to execute work indicated on Contract Drawings. If undesirable material and obstructions are encountered during excavation, remove material and replace as directed by Soils Engineer.
4. Level off bottoms of excavations to receive foundations, floor slabs, equipment support pads, or compacted fill. Remove loose materials and bring excavations into approved condition to receive concrete or fill material. Where compacted fill material must be placed to bring subgrade elevation up to underside of construction, scarify existing subgrade upon which fill material is to be placed to a depth of 6 IN and then compact to density stated in this Section of Specifications before fill material can be placed thereon. Do not carry excavations lower than shown for foundations except as directed by Soils Engineer or Engineer. If any part of excavations is carried below required depth without authorization, maintain excavation and start foundation from excavated level with concrete of same strength as required for superimposed foundation, and no extra compensation will be made to Contractor therefor.
5. Make excavations large enough for working space, forms, dampproofing, waterproofing, and inspection.
6. Notify Soils Engineer and Engineer as soon as excavation is completed in order that subgrades may be inspected. Do not commence further construction until subgrade under compacted fill material, under foundations, under floor slabs-on-grade, under equipment support pads, and under retaining wall footings has been inspected and approved by the Soils Engineer as being free of undesirable material, being of compaction density required by this specification, and being capable of supporting the allowable foundation design bearing pressures and superimposed foundation, fill, and building loads to be placed thereon. Soils Engineer shall be given the opportunity to inspect subgrade below fill material both prior to and after subgrade compaction.
   a. Place fill material, foundations, retaining wall footings, floor slabs-on-grade, and equipment support pads as soon as weather conditions permit after excavation is completed, inspected, and approved and after forms and reinforcing are inspected and approved. Before concrete or fill material is placed, protect approved subgrade from becoming loose, wet, frozen, or soft due to weather, construction operations, or other reasons.

7. Dewatering: Where groundwater is expected to be encountered during excavation, install a dewatering system to prevent softening and disturbance of subgrade below foundations and fill material, to allow foundations and fill material to be placed in the dry, and to maintain a stable excavation side slope. Groundwater shall be maintained at least 3 FT below the bottom of any excavation. Review soils investigation before beginning excavation and determine where groundwater is likely to be encountered during excavation. Employ dewatering specialist for selecting and operating dewatering system. Keep dewatering system in operation until dead load of structure exceeds possible buoyant uplift force on structure. Dispose of groundwater to an area which will not interfere with construction operations or damage existing construction. Install groundwater monitoring wells as necessary. Shut off dewatering system at such a rate to prevent a quick upsurge of water that might weaken the subgrade.
8. Subgrade stabilization: If subgrade under foundations, fill material, floor slabs-on-grade, or equipment support pads is in a frozen, loose, wet, or soft condition before construction is placed thereon, remove frozen, loose, wet, or soft material and replace with approved compacted material as directed by Soils Engineer. Provide compaction density of replacement material as stated in this specification section. Loose, wet, or soft materials, when approved by Soils Engineer, may be stabilized by a compacted working mat of stone stabilization material. Compact stone mat thoroughly into subgrade to avoid future migration of fines into the stone voids. Remove and replace frozen materials as directed by Soils Engineer. Method of stabilization shall be performed as directed by Soils Engineer. Do not place further construction on the repaired subgrades, until the subgrades have been approved by the Soils Engineer.
9. Do not place floor slabs-on-grade including equipment support pads until subgrade below has been approved, piping has been tested and approved, reinforcement placement has been approved, and Contractor receives approval to commence slab construction. Do not place building floor slabs-on-grade including equipment support pads when temperature of air surrounding the slab and pads is or is expected to be below 40 DegF before structure is completed and heated to a temperature of at least 50 DegF.
10. Protection of structures: Prevent new and existing structures from becoming damaged due to construction operations or other reasons. Prevent subgrade under new and existing foundations from becoming wet and undermined during construction due to presence of surface or subsurface water or due to construction operations.
11. Shoring: Shore, sheet pile, slope, or brace excavations as required to prevent them from collapsing. Remove shoring as backfilling progresses but only when banks are stable and safe from caving or collapse.
12. Drainage: Control grading around structures so that ground is pitched to prevent water from running into excavated areas or damaging structures. Maintain excavations where foundations, floor slabs, equipment support pads or fill material are to be placed free of water. Provide pumping required to keep excavated spaces clear of water during construction. Should any water be encountered in the excavation, notify Engineer and Soils Engineer. Provide free discharge of water by trenches, pumps, wells, well points, or other means as necessary and drain to point of disposal that will not damage existing or new construction or interfere with construction operations.
13. Frost protection: Do not place foundations, slabs-on-grade, equipment support pads, or fill material on frozen ground. When freezing temperatures may be expected, do not excavate to full depth indicated, unless foundations, floor slabs, equipment support pads, or fill material can be placed immediately after excavation has been completed and approved. Protect excavation from frost if placing of concrete or fill is delayed.
    a. Where a concrete slab is a base slab-on-grade located under and within a structure that will not be heated, protect subgrade under the slab from becoming frozen until final acceptance of the Project by the Owner.
    b. Protect subgrade under foundations of a structure from becoming frozen until structure is completed and heated to a temperature of at least 50 DegF.

C. Fill and Backfill Inside of Structure and Below Foundations, Base Slabs, Floor Slabs, Equipment Support Pads, Pavement and Piping:
   1. General: Subgrade to receive fill or backfill shall be free of undesirable material as determined by Soils Engineer and scarified to a depth of 6 IN and compacted to density specified herein. Surface may be stepped by at not more than 12 IN per step or may be sloped at not more than 2 percent. Do not place any fill or backfill material until subgrade under fill or backfill has been inspected and approved by Soils Engineer as being free of undesirable material and compacted to specified density.
   2. Obtain approval of fill and backfill material and source from Soils Engineer prior to placing the material.
   3. Granular fill under floor slabs-on-grade: Place all floor slabs-on-grade on a minimum of 6 IN of granular fill unless otherwise indicated.
   4. Granular fill under base slabs with pressure relief valves:
      a. Provide a minimum thickness of 6 IN of filter material over the subgrade.
      b. Provide a minimum thickness of 1 FT of drainage material between the bottom of the base slab and the top of the filter material.
      c. Compact as specified in this Section.
      d. A geotextile filter fabric approved by the Engineer may be substituted for the filter material.
   5. Geotextile filter fabric:
      a. Lap filter fabric 12 IN at splices.
      b. Cover punctures and tears with an additional layer of fabric lapped 12 IN all around.
      c. Do not puncture fabric with grade stakes or other items.
      d. Spread the drainage material over the filter fabric in the direction of the lap splices.
   6. Vapor barrier: Install a continuous vapor barrier under floor slabs-on-grade as required by Section 03002 and shown on Contract Drawings.
   7. Fill and backfill placement: Prior to placing fill and backfill material, optimum moisture and maximum density properties for proposed material shall be obtained from Soils Engineer. Place fill and backfill material in thin lifts as necessary to obtain required compaction density. Compact material by means of equipment of sufficient size and proper type to obtain specified density. Use hand operated equipment for filling and backfilling next to walls. Do not place fill and backfill when the temperature is less than 40 DegF and when subgrade to receive fill and backfill material is frozen, wet, loose, or soft. Use vibratory equipment to compact granular material; do not use water.
   8. Where fill material is required below foundations, place fill material, conforming to the required density and moisture content, outside the exterior limits of foundations located around perimeter of structure the following horizontal distance whichever is greater:
      a. As required to provide fill material to indicated finished grade.
      b. 5 FT.
      c. Distance equal to depth of compacted fill below bottom of foundations.
      d. As directed by Soils Engineer.

D. Filling and Backfilling Outside of Structures. This paragraph of these specifications apply to fill and backfill placed outside of structures above bottom level of both foundations and piping but not under paving. Provide material as approved by Soils Engineer for filling and backfilling outside of structures.
   1. Fill and backfill placement: Prior to placing fill and backfill material, obtain optimum moisture and maximum density properties for proposed material from Soils Engineer. Place fill and backfill material in thin lifts as necessary to obtain required compaction density. Compact material with equipment of proper type and size to obtain density specified. Use only hand operated equipment for filling and backfilling next to walls and retaining walls. Do not place fill or backfill material when temperature is less than 40 DegF and when subgrade to receive material is frozen, wet, loose, or soft. Use vibratory equipment for compacting granular material; do not use water.
   2. Backfilling against walls:

a. Do not backfill around any part of structures until each part has reached specified 28-day compressive strength and backfill material has been approved. Do not start backfilling until concrete forms have been removed, trash removed from excavations, pointing of masonry work, concrete finishing, dampproofing and waterproofing have been completed.
b. Do not place fills against walls until floor slabs at top, bottom, and at intermediate levels of walls are in place and have reached 28-day required compressive strength to prevent wall movement.
c. Bring backfill and fill up uniformly around the structures and individual walls, piers, or columns.

E. Backfilling Outside of Structures Under Piping or Paving: When backfilling outside of structures requires placing backfill material under piping or paving, the material shall be placed from bottom of excavation to underside of piping or paving at the density required for fill under piping or paving as indicated in this Section. This compacted material shall extend transversely to the centerline of piping or paving a horizontal distance each side of the exterior edges of piping or paving equal to the depth of backfill measured from bottom of excavation to underside of piping or paving. Provide special compacted bedding or compacted subgrade material under piping or paving as required by other sections of these Specifications.

3.10 SPECIAL REQUIREMENTS

A. Erosion Control: Conduct work to minimize erosion of site. Construct stilling areas to settle and detain eroded material. Remove eroded material washed off site. Clean streets daily of any spillage of dirt, rocks or debris from equipment entering or leaving site.

END OF SECTION

SECTION 02221
TRENCHING, BACKFILLING, AND COMPACTING FOR UTILITIES

PART 1 - GENERAL

1.1 SUMMARY

A. Section Includes:
   1. Excavation, trenching, backfilling and compacting for all underground utilities.
   2. Wastewater piping.
   3. Sewers, channel, and drain piping.
   4. Water piping.
   5. Natural gas.
   6. Relocation of existing piping.
   7. Surface drainage conduits and piping.
   8. Electrical duct banks, conduits, and direct burial cables.
   9. All related utility and process appurtenances.

B. Related Sections include but are not necessarily limited to:
   1. Division 0 - Bidding Requirements, Contract Forms, and Conditions of the Contract.
   2. Division 1 - General Requirements.
   3. Section 02200 - Earthwork.
   4. Section 02224 - Pipeline Undercrossings.

1.2 QUALITY ASSURANCE

A. Referenced Standards:
   1. American Society for Testing and Materials (ASTM):
      a. C33, Standard Specification for Concrete Aggregates.
      b. C150, Standard Specification for Portland Cement.
      c. C403, Standard Test Method for Time of Setting of Concrete Mixtures by Penetration Resistance.
      d. C618, Standard Specification for Coal Fly Ash and Raw or Calcined Natural Pozzolan for Use in Concrete.
      e. C939, Standard Test Method for Flow of Grout for Preplaced-Aggregate Concrete (Flow Cone Method).
      f. D1556, Standard Test Method for Density and Unit Weight of Soil in Place by the Sand-Cone Method.
      g. D1557, Standard Test Methods for Laboratory Compaction Characteristics of Soil Using Modified Effort (56,000 ft-LBf/ft(2,700 kN-m/m)).
      h. D2167, Standard Test Method for Density and Unit Weight of Soil in Place by the Rubber Balloon Method.
      i. D2937, Standard Test Method for Density of Soil in Place by the Drive-Cylinder Method.
      j. D4253, Standard Test Methods for Maximum Index Density of Soils Using a Vibratory Table.
      k. D4254, Minimum Index Density of Soils and Calculation of Relative Density.
      l. D4832, Standard Test Method for Preparation and Testing of Controlled Low Strength Material (CLSM) Test Cylinders.
      m. D5971, Standard Practice for Sampling Freshly Mixed Controlled Low-Strength Material.
      n. D6023, Standard Test Method for Density (Unit Weight), Yield, Cement Content, and Air Content (Gravimetric) of Controlled Low-Strength Material (CLSM).

o. D6938 Standard Test Method for In-Place Density and Water Content of Soil and Soil-Aggregate by Nuclear Methods (Shallow Depth).

B. Qualifications:
1. Hire an independent soils laboratory to conduct in-place moisture-density tests for backfilling to assure that all work complies with this Specification.

1.3 DEFINITIONS

A. Excavation:
1. All excavation will be defined as unclassified.

1.4 SUBMITTALS

A. Shop Drawings:
1. See Section 01340.
2. Product technical data including:
a. Acknowledgement that products submitted meet requirements of standards referenced.
b. Manufacturer's installation instructions.
3. Trench Safety Plan and/or trench shoring drawings including current certification of trench shields (trench boxes) if employed.
4. Submit respective pipe or conduit manufacturer's data regarding bedding methods of installation and general recommendations.
5. Submit sieve analysis reports on all granular materials.
6. Submit moisture-density relationships for all types of soil materials used.

B. Miscellaneous Submittals:
1. Submit test reports and fully document each with specific location or stationing information, date, and other pertinent information.

C. Retain the services of a registered professional engineer to design trench shoring systems or other trench safety plans as required by law.

1.5 PROJECT CONDITIONS

A. Avoid overloading or surcharge a sufficient distance back from edge of excavation to prevent slides or caving. Maintain and trim excavated materials in such manner to be as little inconvenience as possible to public and adjoining property owners.

B. Provide full access to public and private premises and fire hydrants, at street crossings, sidewalks and other points as designated by City of Boerne to prevent serious interruption of travel.

C. Protect and maintain bench marks, monuments or other established points and reference points and if disturbed or destroyed, replace items to full satisfaction of Owner and City of Boerne.

D. Verify location of existing underground utilities.

PART 2 - PRODUCTS

2.1 MATERIALS

A. Secondary Backfill Material:
1. As approved by Engineer.
2. Free of large stones, chunks of concrete and asphalt, and clods,
a. Maximum particle size: 2 1/2 IN.
3. Free of organic or other deleterious materials.
4. Free of trash.
5. USCS soil types GW, GP, GM, GC, SW, SP, SM, SC, CL, and ML per ASTM D2487.
6. Do not use USCS soil types OL, OH or PT per ASTM D2487.

7. When in street ROW and under pavements, plasticity index: 20 maximum.
8. USCS Soil types CH, MH per ASTM D2487 may only be used with recommendation of Soils Engineer and approval by City of Boerne.
9. Moisture content at time of placement: 2 percent plus/minus of optimum moisture content as specified in accordance with ASTM D1557.

B. Subgrade Stabilization Materials: Provide subgrade stabilization material consisting of angular crushed stone or crushed gravel: ASTM C33, gradation size No. 1, 3 1/2 to 1 1/2; or gradation size No. 2, 2 1/2 to 1 1/2.

C. Grade 5 Material:
1. Well graded crushed stone or crushed gravel.
2. ASTM C33 graded as follows:

Sieve Size	1/2 IN	3/8 IN	No.4	No.10	No.20
Percent Passing by Weight	100	95-100	20-80	0-25	0-2

D. Bedding and Initial Backfill Materials:
1. As approved by the City of Boerne.
2. For Drainage Pipe, Sanitary Sewer Pipe, and Water Pipe, ductile iron, PVC, or PE: Grade 5 Material.
3. For Electric conduits, gas mains and water services: ASTM C33, “Poteet Red Sand”.

E. Controlled Low-Strength Material (CLSM): Sometimes known as Flowable Fill.
1. General: Composed of a mixture of cementitious material, aggregate, water, filler and admixtures. CLSM is easily placed and hardens to provide a bearing strength equal to or greater than compacted soils. It can, with approval from the City of Boerne, be used as a pipe bedding material, trench backfill or anywhere else requiring these unique properties.
2. Materials: Provide a mixture of the following materials in proper proportions to obtain properties specified.
   a. Cement: ASTM C150, Type I or II:
      1) Min. 50 LB\CY
      2) Max. 200 LB\CY
   b. Fly Ash: ASTM C618: Class C: max. 350 LB\CY
   c. Water: min. 250 LB\CY max. 600 LB\CY
   d. Aggregate: Provide either of the following or a mixture.
      1) ASTM C33: max. size ¼”.
      2) Sand: 95-100% passing #4 Sieve.
         0-5% passing #200 Sieve.
   e. Air Entrainment Admixtures: “Daravair”, “Micro-Air” or equal.
   f. Other admixtures and non-standard materials will be evaluated on a case by case basis.
3. Properties: Flowable fill shall exhibit the following properties.
   a. Flowability: ASTM C939: Efflux time of 30 seconds ±5 seconds with no segregation.
   b. Subsidence: Max. 1/8 inch per foot depth as measured in field.
   c. Hardening Time: 3-5 hours to reach a penetration resistance of 650 as measured by ASTM C403 under normal conditions (±70°F, ±40% humidity).
   d. Unit Weight: ASTM D6023:
      1) Min. 90 LB\CF.
      2) Max. 145 LB\CF.
   e. Entrained Air: ASTM D6023:
      1) Min. 5%
      2) Max. 20%.
   f. Strength: ASTM D4832 at 7 days:
      1) Min. 75 PSI.
      2) Max. 750 PSI.

PART 3 - EXECUTION

3.1 GENERAL

A. Remove and dispose of unsuitable materials as directed by Soils Engineer or as directed by the City of Boerne.

3.2 EXCAVATION

A. Unclassified Excavation:
   1. Remove rock excavation, clay, silt, gravel, hard pan, loose shale, and loose stone as directed by Soils Engineer.

B. Excavation for Appurtenances:
   1. 12 IN (minimum) clear distance between outer surface and embankment.
   2. See Section 02200 for applicable requirements.
   3. See Section 02515 for applicable requirements.

C. Trench Excavation:
   1. Excavate trenches by open cut method to depth shown on Drawings and necessary to accommodate work.
      a. Tunnel work for crossing under crosswalks, driveways or existing utility lines with permission.
         1) Limit tunnels to 10 FT in length.
   2. Open trench outside buildings, units, and structures:
      a. No more than the distance between two manholes, structures, units, or 600 LF, whichever is less.
      b. Field adjust limitations as weather conditions dictate.
   3. Trenching within buildings, units, or structures:
      a. No more than 100 LF at any one time.
   4. Any trench or portion of trench, which is opened and remains idle for 7 calendar days, or longer, as determined by the Owner, may be directed to be immediately refilled, without completion of work, at no additional cost to Owner. Said trench may not be reopened until Owner is satisfied that work associated with trench will be prosecuted with dispatch.
   5. Observe following trenching criteria:
      a. Trench size.
         1) Excavate width to accommodate free working space.
         2) Maximum trench width at top of pipe or conduit may not exceed outside diameter of utility service by more than the following dimensions:

OVERALL DIAMETER OF UTILITY SERVICE	EXCESS DIMENSION
33 IN and less	18 IN
more than 33 IN	24 IN

         3) Cut trench walls vertically from bottom of trench to 1 FT above top of pipe, conduit, or utility service.
         4) Keep trenches free of water. Include cost of dewatering in original proposal.

D. Trenching for Electrical Installations:
   1. Observe paragraph 3.2 C "Trench Excavation"
   2. Modify for electrical installations as follows:
      a. Open no more than 600 LF of trench in exterior locations for trenches more than 12 IN but not more than 30 IN wide.
      b. Any length of trench may be opened in exterior locations for trenches which are 12 IN wide or less.
      c. Do not over excavate trench.

d. Cut trenches for electrical runs with minimum 30 IN cover, unless otherwise specified.

3.3 PREPARATION OF FOUNDATION FOR PIPE LAYING

A. Over-Excavation:
   1. As shown on drawings.
   2. Backfill with granular bedding material.
   3. Hand place, shovel, slice and pneumatically tamp all bedding material.
   4. Form bell holes in trench bottom and ensure that bedding material supports full length of pipe.

B. Rock Excavation:
   1. Excavate minimum of 6 IN below bottom exterior surface of the pipe or conduit.
   2. Backfill to grade with granular bedding material.
   3. Form bell holes in trench bottom.

C. Subgrade Stabilization:
   1. Stabilize the subgrade when directed by the Soils Engineer or City of Boerne.
   2. Observe the following requirements when unstable trench bottom materials are encountered.
      a. Notify Soils Engineer and City of Boerne when unstable materials are encountered.
         1) Define by drawing station locations and limits.
      b. Remove unstable trench bottom caused by Contractor failure to dewater, rainfall, or Contractor operations.
         1) Replace with subgrade stabilization with no additional compensation.

3.4 BACKFILLING METHODS

A. Do not backfill until tests to be performed on system show system is in full compliance to specified requirements.

B. Initial Backfill:
   1. Furnish where indicated on drawings, specified for trench embedment conditions and for compacted backfill conditions to 12 IN above top of pipe or conduit.
   2. Comply with the following:
      a. Place backfill in lifts not exceeding 8 IN (loose thickness).
      b. Hand place, shovel slice, and pneumatically tamp all initial backfill.
      c. Observe specific manufacturer's recommendations regarding backfilling and compaction.
      d. Compact each lift to specified requirements.

C. Secondary Trench Backfill:
   1. Perform in accordance with the following:
      a. Place backfill in maximum 8 IN loose lifts and compact to densities specified.
      b. Observe specific manufacturer's recommendations regarding backfilling and compaction.
      c. Avoid displacing joints and appurtenances or causing any horizontal or vertical misalignment, separation, or distortion.

D. Water flushing for consolidation is not permitted.

E. Backfilling for Electrical Installations:
   1. Observe paragraph 3.4 C or D "Backfilling Methods."
   2. Modify for electrical installation as follows:
      a. Observe notes and details on electrical drawings for fill in immediate vicinity of direct burial cables.

3.5 COMPACTION

A. General:

1. Place and assure bedding, backfill, and fill materials achieve an equal or "higher" degree of compaction than undisturbed materials adjacent to the work.
2. In no case shall degree of compaction below "Minimum Compaction" specified be accepted.

B. Compaction Requirements: Unless noted otherwise on Drawings or more stringently by other sections of these Specifications, comply with following trench compaction criteria:

MINIMUM COMPACTIONS

LOCATION	SOIL TYPE	DENSITY
1. Bedding Material:		
All Locations	Cohesionless Soils	75 percent of max relative density by ASTM D4253 and D4254
2. Initial backfill:		
All applicable areas	Cohesionless soils	75 percent of max relative density by ASTM D4253 and D4254
3. Secondary trench backfill:		
Under pavements roadways surfaces, within highway right-of-ways	Cohesive soils	95 percent of max dry density by ASTM D1557
	Cohesionless soils	75 percent of max relative density by ASTM D4253 and D4254
Under turfed, sodded, plant seeded, non-traffic areas	Cohesive soils	90 percent of max dry density by ASTM D1557
	Cohesionless soils	65 percent of max relative density by ASTM D4253 and D4254

3.6 FIELD QUALITY CONTROL

A. Testing Agency: coordinate with the geotechnical engineering testing agency to perform field quality-control testing. Test backfill within 48 hours of placement and compaction.

B. Allow testing agency to inspect and test subgrades and each fill or backfill layer. Proceed with subsequent earthwork only after test results for previously completed work comply with requirements.

C. Submit moisture-density relationships for backfill materials to City of Boerne prior to field testing. Provide the City of Boerne a minimum of 24 hours notice prior to scheduling testing.

D. Make test holes where directed by City of Boerne to verify proper placement and thickness of bedding, initial backfill and secondary backfill.
   1. Minimum Interval:

a. Trenches < 12 FT deep: 1 test per lift per 500 LF of trench.
b. Trenches 12 FT or > 12 FT deep: 1 test per lift per 300 FT of trench.

E. Testing agency will test compaction of soils in place according to ASTM D1556, ASTM D2167, ASTM D6938, and ASTM D2937, as applicable. Tests will be performed at the following locations and frequencies.
1. Minimum Interval:
   a. Trench Backfill for trenches < 12 FT deep: At least one test per lift for each 500 FT (152 m) or less of trench length.
   b. Trench Backfill for trenches 12 FT or >12 FT deep: At least one test per lift for each 300 FT or less of trench length.

F. When testing agency reports that subgrades, fills, or backfills have not achieved degree of compaction specified, scarify and moisten or aerate, or remove and replace soil to depth required; recompact and retest at Contractor's expense until specified compaction is obtained.

G. CLSM: Testing agency shall sample fresh flowable fill per ASTM D5971, one sample for each days pour exceeding 5 CY plus additional samples for each 50 CY more than the first 25 CY of each day's pour. Testing agency shall test samples for the following:
1. Unit Weight: ASTM D6023
2. Cement Content: ASTM D6023
3. Air Content: ASTM D6023
4. Compressive Strength: ASTM D4832

H. When testing agency reports deficiencies in CLSM strength, air content, cement content or unit weight or other properties specified remove CLSM and replace with CLSM meeting requirements.

I. Assure Owner and City of Boerne has immediate access for testing of all soils related work.

J. Ensure excavations are safe for testing personnel.

K. All testing shall be performed under observation of City of Boerne.

END OF SECTION

SECTION 02224
PIPELINE UNDERCROSSINGS

PART 1 - GENERAL

1.1 SUMMARY

A. Section Includes:
   1. Construction of pipe undercrossings beneath roadways, railroads, etc.

B. Related Sections include but are not necessarily limited to:
   1. Division 0 - Bidding Requirements, Contract Forms, and Conditions of the Contract.
   2. Division 1 - General Requirements.
   3. Section 02221 - Trenching, Backfilling, and Compacting for Utilities.
   4. Section 02530 – Sanitary Sewerage.
   5. Section 02660 – Water Main Construction.

1.2 UNIT PRICES

A. Measurement: From beginning to end of casing pipe indicated and by size of casing pipe.

B. Payment: At the unit price bid, measured as specified above and includes jacking and boring of casing pipe, casing pipe, grouting in place of carrier pipe, carrier pipe, welding of casing pipe, and all appurtenant construction and work required.

1.3 QUALITY ASSURANCE

A. Referenced Standards:
   1. American National Standards Institute (ANSI):
      a. B1.1, Unified Inch Screw Threads (UN and UNR Thread Form).
      b. B31.9, Building Services Piping.
   2. American Society for Testing and Materials (ASTM):
      a. A53, Standard Specification for Pipe, Steel, Black and Hot-Dipped, Zinc-Coated Welded and Seamless.
      b. B695, Standard Specification for Coatings of Zinc Mechanically Deposited on Iron and Steel.
   3. American Water Works Association (AWWA):
      a. C200, Steel Water Pipe 6 IN and Larger.
      b. C206, Field Welding of Steel Water Pipe.
      c. Manual M11, Steel Pipe - A Guide for Design and Installation.
   4. Military Specifications:
      a. QQ-P-416F, Plating, Cadmium Electro Deposited.

B. Qualifications:
   1. Contractor shall have extensive experience in installing pipeline undercrossings as specified.
      a. Minimum 10 years experience in industry including pipeline undercrossings.
      b. Minimum of 10 similar crossings installed in last 3 years.
   2. Use only certified welders meeting procedures and performance outlined in Section IX of the ANSI/ASME Boiler and Pressure Vessel Code or AWS B2.1 and other codes and requirements per local building and utility requirements.

1.4 SUBMITTALS

A. Shop Drawings:
   1. See Section 01340.
   2. Product technical data including:

a. Acknowledgement that products submitted meet requirements of standards referenced.
b. Manufacturer's installation instructions.
c. Compliance with submittal requirements of authority or agency having jurisdiction over undercrossing.

3. Factory test reports.
4. Welders certificates.
5. Copy of permit from authority or agency having jurisdiction over the undercrossing.
6. Copy of Railroad Protective Equipment to be submitted prior to initiation of work.
7. Procedures required by the authority or agency having jurisdiction over the undercrossing.

B. Operation and Maintenance Manuals:
1. See Section 01340.

PART 2 - PRODUCTS

2.1 MATERIALS

A. Casing Pipe:
1. Structural grade steel: Minimum yield strength of 35,000 psi or greater as required by the permits.
2. Wall thickness: Minimum 0.375 IN or greater as required by the permits, coordinate inside diameter with manufactured centering rings and end plugs.
3. Diameter: as indicated.

B. Steel Pipe (Fabricated Type):
1. AWWA C200.

C. Steel Pipe (Mill Type):
1. ASTM A53, Type E or S.

D. Nuts and Bolts:
1. Buried: Cadmium-plated meeting Military Specification QQP416F, Type 1, Class 2 (Cor-Ten) for buried application
2. Exposed: Mechanical galvanized ASTM B695, Class 40.
3. Heads and dimensions per ANSI B1.1.
4. Threaded per ANSI B1.1.
5. Project ends 1/4 to 1/2 IN beyond nuts.

E. Steel casing spacers:
1. Bands: 14 GA carbon steel.
2. Risers: 10 GA carbon steel.
3. Coating: 10 – 16 mil fusion bonded copolymer thermoplastic or PVC.
4. Runners: glass reinforced polymer.
5. Liner: 0.090 IN thick PVC or EPDM.
6. Hardware, studs, nuts bolts: 304 stainless steel.
7. Compressive strength: 18,000 PSI minimum.

F. Stainless steel casing spacers
1. Bands: 14 GA 304 stainless steel.
2. Risers: 20 GA 304 stainless steel.
3. Runners: glass reinforced polymer.
4. Liner: 0.090 IN thick PVC or EPDM.
5. Hardware, studs, nuts, bolts: 304 stainless steel.
6. Compressive strength: 18,000 PSI minimum.

G. Non-Metallic casing spacers:
1. Bands: Polypropylene.
2. Runners: Polypropylene.

3. Hardware: Units that are secured with sliding polypropylene locks.
4. Compressive strength: 3,000 PSI minimum.

H. End Seals:
1. Carrier pipe centered in casing pipe: Modular seal, Linkseal or equal.
2. Carrier pipe not centered in casing pipe: One-piece synthetic rubber molded “S” shaped seal.
   a. 3/8 IN thick SBR, 60 durometer rubber.
   b. ½ IN wide 304 stainless steel bands.

PART 3 - EXECUTION

3.1 INSTALLATION

A. General:
1. Install undercrossing to meet requirements of authority or agency having jurisdiction over undercrossing.
2. Observe work requirements stipulated in any permit condition.
3. Consult Contract Drawings for limitation of construction right-of-way.

B. If installation of crossing is by jacking or dry boring, the following will be required unless more rigid requirements are specified by the authority or agency having jurisdiction over the crossing:
1. Diameter of the hole: Not exceeding diameter of casing by more than 1-1/2 IN.
2. Pressure grout all voids outside of casing, including abandoned or misaligned holes.
3. Undercrossing casing:
   a. Full lengths.
   b. Weld pressure tight.
4. After casing is installed, use casing spacers at min. 10’ spacing or less as required by manufacturer.
5. Coordinate connections to system with authority or agency having jurisdiction over the crossing.
6. Plug ends of casing with End seals.

C. Joining Method - Welded Joints:
1. Perform welding in accordance with AWWA C206.

D. Carrier Pipe:
1. Install carrier pipe as specified with casing spacers.
   a. For steel (excluding mortar coated) carrier pipe sizes <15 IN and <200 FT long: Steel casing spacers or non-metallic casing spacers.
   b. For steel pipe sizes 15 IN and greater or crossing 200 FT long and longer: Stainless steel casing spacers.
   c. For HDPE and PVC carrier pipes: Non-Metallic casing spacers or stainless steel casing spacers.
   d. For mortar coated, ductile iron, concrete, and clay carrier pipe: Stainless steel casing spacers.
   e. Install 2 within 2 FT of each joint with one on either side of each joint.
   f. Maximum spacing: 10 FT.
2. Use restrained joints on carrier pipe.

3.2 TOLERANCES

A. Install Casing pipe in straight horizontal alignment and vertical alignment within the following tolerances.
1. Horizontal alignment: Maximum deviation: ½ IN in 10 FT measured with 10 FT straight Edge, maximum of 2 IN in 100 FT overall deviation from straight and Maximum 3 IN deviation from line on plans.

2. Vertical alignment: Maximum deviation: ½ IN in 10 FT measured with a 10 FT straight edge, maximum of 1 IN in 100 FT overall deviation from straight and maximum 1 IN from grade on plans provided Carrier pipe can be kept to grade with spacers.

END OF SECTION

SECTION 02260
TOPSOILING AND FINISHED GRADING

PART 1 - GENERAL

1.1 SUMMARY

A. Section Includes:
   1. Topsoiling and finished grading.

B. Related Sections include but are not necessarily limited to:
   1. Division 0 - Bidding Requirements, Contract Forms, and Conditions of the Contract.
   2. Division 1 - General Requirements.
   3. Section 02110 - Site Clearing.
   4. Section 02200 - Earthwork.
   5. Section 02270 - Soil Erosion and Sediment Control.
   6. Section 02930 - Seeding, Sodding and Landscaping.

C. Location of Work: All areas within limits of grading and all areas outside limits of grading which are disturbed in the course of the work.

1.2 SUBMITTALS

A. Shop Drawings:
   1. See Section 01340.

B. Project Data:
   1. Test reports for furnished topsoil.

1.3 PROJECT CONDITIONS

A. Verify amount of topsoil stockpiled and determine amount of additional topsoil, if necessary to complete work.

PART 2 - PRODUCTS

2.1 MATERIALS

A. Topsoil:
   1. Original surface soil typical of the area.
   2. Existing topsoil stockpiled under Section 02110.
   3. Capable of supporting native plant growth.
   4. Free from rocks and clods.
   5. pH: between 6 and 8.

2.2 TOLERANCES

A. Finish Grading Tolerance: 0.1 FT plus/minus from required elevations.

PART 3 - EXECUTION

3.1 PREPARATION

A. Correct, adjust and/or repair rough graded areas.
   1. Cut off mounds and ridges.
   2. Fill gullies and depressions.

3. Perform other necessary repairs.
4. Bring all sub-grades to specified contours, even and properly compacted.

B. Loosen surface to depth of 2 IN, minimum.

C. Remove all stones and debris over 2 IN in any dimension.

3.2 ROUGH GRADE REVIEW

A. Reviewed by Engineer in Section 02110, Site Clearing.

3.3 PLACING TOPSOIL

A. Do not place when subgrade is wet or frozen enough to cause clodding.

B. Spread to compacted depth of 4 IN minimum for all disturbed earth areas.

C. If topsoil stockpiled is less than amount required for work, furnish additional topsoil at no cost to Owner.

D. Provide finished surface free of stones, sticks, or other material 1 IN or more in any dimension.

E. Provide finished surface smooth and true to required grades.

F. Restore stockpile area to condition of remainder of finished work.

3.4 ACCEPTANCE

A. Upon completion of topsoiling, obtain Engineer's acceptance of grade and surface.

B. Make test holes where directed to verify proper placement and thickness of topsoil.

3.5 PROTECTION

A. Provide mulch or geosynthetic fabric to prevent erosion of topsoil until vegetation is established.

B. Clean topsoil that erodes into streets, etc.

C. Replace topsoil lost to erosion.

END OF SECTION

SECTION 02270
SOIL EROSION AND SEDIMENT CONTROL

PART 1 - GENERAL

1.1 SUMMARY

A. Section Includes:
   1. Soil erosion and sediment control.

B. Related Sections include but are not necessarily limited to:
   1. Division 0 - Bidding Requirements, Contract Forms, and Conditions of the Contract.
   2. Division 1 - General Requirements.

1.2 QUALITY ASSURANCE

A. Referenced Standards:
   1. Erosion control standards: "Standards and Specifications for Soil Erosion and Sediment Control in Developing Areas" by the U.S. Department of Agriculture, Soil Conservation Service, College Park, Maryland.

PART 2 - PRODUCTS

2.1 MATERIALS

A. Pipe Riser and Barrel: 16 GA corrugated metal pipe (CMP) of size indicated.

B. Rock Berms:
   1. Rock: clean, open graded, 3 IN to 5 IN rock or stone, crushed or uncrushed.
   2. Wire: 1 IN opening, woven wire mesh, galvanized, 20 gauge.

C. Grass Seed: Annual ryegrass or as otherwise specified by Engineer.

D. Silt Fence:
   1. Fabric: woven polypropylene fabric.
      a. 36 IN wide.
      b. Tensile Strength: ASTM D 4632, 100 LB minimum.
      c. Elongation @ Yield: ASTM D 4632, 10%–40%.
      d. Trapezoidal Tear: ASTM D 4533, 50 LB minimum.
      e. Apparent Opening Size: ASTM D 4751, 20–50.
      f. Permittivity: ASTM D 4491, 0.1/sec. minimum.
      g. Ultraviolet Stability: ASTM D 4355, 80% minimum of original tensile strength retained after 500 hr. exposure.
   2. Wire Backing: galvanized:
      a. Welded wire, 12-1/2 Gauge.
      b. Openings: 2 IN by 4 IN.
   3. Posts
      a. Min. length: 4 FT.
      b. Steel T-Bar or L-Bar.
      c. Painted or galvanized.
      d. Min. weight: 1.25 lb/ft
      e. Min. brinnell hardness: 140.

E. Stabilized Construction Entrance:
   1. Rock: clean, open graded, 4 IN to 6 IN rock or stone, crushed or uncrushed.
   2. Pipe: 16 GA minimum, corrugated metal pipe (CMP) of size indicated.

F. Sandbags:
   1. Woven polypropylene, polyethylene or polyamide fabric:
      a. Minimum weight: 4 OZ per SY.
      b. Minimum mullen burst strength: 300 PSI.
      c. UV stability: greater than 70%.
   2. Sand:
      a. Natural or manufactured.
      b. Maximum 3% retained on #4 sieve.
      c. Minimum 80% retained on #100 sieve.
      d. Minimum 95% retained on #200 sieve.
   3. Filled bags dimensions:
      a. Length: 24 to 30 IN.
      b. Width: 16 to 18 IN.
      c. Thickness: 6 to 8 IN.

G. Construction perimeter fence:
   1. Orange construction fence fabric as approved by the City.
   2. Posts: wood nominal 2x4, 60 IN long.
   3. Steel: T or L-shaped, minimum 0.5 LB/FT, 60 IN long.
   4. Wire: minimum 11 gauge galvanized smooth or twisted wire.
   5. Tie wire: 16 gauge or larger.
   6. Staples: minimum ½ IN wide crown with minimum ½ IN long legs.
   7. Flagging: brightly colored, fade-resistant, min. ¾ IN wide.

PART 3 - EXECUTION

3.1 PREPARATION

A. Prior to General Stripping Topsoil and Excavating:
   1. Install perimeter dikes and swales.
   2. Excavate and shape sediment basins and traps.
   3. Construct pipe spillways and install rock berms and silt fence where required.
   4. Machine compact all berms, dikes and embankments for basins and traps.

B. Construct sediment traps where indicated on Drawings during rough grading as grading progresses.

C. Temporarily seed basin slopes and topsoil stockpiles:
   1. Rate: 1/2 LB/1000 SF.
   2. Reseed as required until good stand of grass is achieved.

3.2 DURING CONSTRUCTION PERIOD

A. Maintain Basins, Dikes, Traps, Rock berms, Silt fences, Etc.:
   1. Inspect regularly especially after rainstorms.
   2. Repair or replace damaged or missing items.

B. After rough grading, sow temporary grass cover over all exposed earth areas not draining into sediment basin or trap.

C. Construct inlets as soon as possible.
   1. Excavate and tightly secure silt fences, or sand bags completely around inlets as detailed on Drawings.

D. Provide necessary swales and dikes to direct all water towards and into sediment basins and traps.

E. Do not disturb existing vegetation (grass and trees).

F. Excavate sediment out of basins and traps when capacity has been reduced by 50 percent.
   1. Remove sediment from behind silt fences and rock berms to prevent overtopping.

G. Topsoil and Fine Grade Slopes and Swales, Etc.:
   1. Seed and mulch as soon as areas become ready.

3.3 NEAR COMPLETION OF CONSTRUCTION

A. Re-vegetate disturbed areas.

B. Eliminate basins, dikes, traps, etc.

C. Grade to finished or existing grades.

D. Fine grade all remaining earth areas, then seed and mulch.

END OF SECTION

SECTION 02423
STORM DRAINAGE SYSTEM

PART 1 - GENERAL

1.1 SUMMARY

A. Section Includes:
   1. Storm drainage systems.
   2. Storm drainage pipe.
   3. Inlets, headwalls, flumes and flared end sections.

B. Related Sections include but are not necessarily limited to:
   1. Division 0 - Bidding Requirements, Contract Forms, and Conditions of the Contract.
   2. Division 1 - General Requirements.
   3. Section 02110 - Site Clearing.
   4. Section 02220 - Earthwork.
   5. Section 02221 - Trenching, Backfilling, and Compacting for Utilities.
   6. Section 02260 - Topsoiling and Finished Grading.
   7. Section 03002 - Concrete

1.2 QUALITY ASSURANCE

A. Referenced Standards:
   1. American Association of State Highway and Transportation Officials (AASHTO):
      a. M36, Corrugated Steel Culverts and Underdrains.
      b. M190, Standard Specification for Bituminous Coated Corrugated Metal Culvert Pipe and Pipe Arches.
   2. American Society for Testing and Materials (ASTM):
      a. A48, Standard Specification for Gray Iron Castings.
      b. A742, Standard Specification for Steel Sheet, Metallic Coated and Polymer Precoated for Corrugated Steel Pipe.
      c. A762, Standard Specification for Corrugated Steel Pipe, Polymer Precoated for Sewers and Drains.
      d. A796, Standard Practice for Structural Design of Corrugated Steel Pipe, Pipe-Arches, and Arches for Storm and Sanitary Sewers and Other Buried Applications.
      e. A798, Standard Practice for Installing Factory-Made Corrugated Steel Pipe for Sewers and Other Applications.
      f. B744, Standard Specification for Aluminum Alloy Sheet for Corrugated Aluminum Pipe.
      g. B745, Standard Specification for Corrugated Aluminum Pipe for Sewers and Drains.
      h. B790, Standard Practice for Structural Design of Corrugated Aluminum Pipe, Pipe-Arches, and Arches for Culverts, Storm Sewers, and Other Buried Conduits.
      i. C76, Standard Specification for Reinforced Concrete Culvert, Storm Drain, and Sewer Pipe.
      j. C443, Standard Specification for Joints for Concrete Pipe and Manholes, Using Rubber Gaskets.
      k. C478, Standard Specification for Precast Reinforced Concrete Manhole Sections.
      l. C877, Standard Specification for External Sealing Bands for Concrete Pipe, Manholes, and Precast Box Sections.
      m. C890, Standard Practice for Minimum Structural Design Loading for Monolithic or Sectional Precast Concrete Water and Wastewater Structures.
      n. C891, Standard Practice for Installation of Underground Precast Concrete Utility Structures.

o. C913, Standard Specification for Precast Concrete Water and Wastewater Structures.
p. C923, Standard Specification for Resilient Connectors Between Reinforced Concrete Manhole Structures, Pipes, and Laterals.C1244, Standard Test Method for Concrete Sewer Manholes by the Negative Air Pressure (Vacuum) Test Prior to Backfill
q. C924, Standard Practice for Testing Concrete Pipe Sewer Lines by Low-Pressure Air Test Method.
r. C969, Standard Practice for Infiltration and Exfiltration Acceptance Testing of Installed Precast Concrete Pipe Sewer Lines.
s. C990, Standard Specification for Joints for Concrete Pipe, Manholes, and Precast Box Sections Using Preformed Flexible Joint Sealants.
t. C1244, Standard Test Method for Concrete Sewer Manholes by the Negative Air Pressure (Vacuum) Test Prior to Backfill.
u. C1433, Standard Specification for Precast Reinforced Concrete Monolithic Box Sections for Culverts, Storm Drains, and Sewers.
v. F593, Standard Specification for Stainless Steel Bolts, Hex Cap Screws, and Studs.
w. F594, Standard Specification for Stainless Steel Nuts.

3. Texas Department of Transportation (TxDoT):
   a. Standard Specifications for Construction of Highways, Streets and Bridges.

1.3 SUBMITTALS

A. Shop Drawings:
   1. See Section 01340.
   2. Layout drawings.
   3. Product technical data including:
      a. Acknowledgement that products submitted meet requirements of standards referenced.
      b. Manufacturer's installation instructions.
   4. Certifications.
   5. Test reports.
   6. Structural calculations for the thickness design of the pipe, signed and sealed by a Professional Engineer licensed by the State of Texas.
   7. Submit all tests and certification in a single coordinated submittal. Partial submittals will not be accepted.

B. Submit schedules and details for structures and joints.

C. Operation and Maintenance Manuals:
   1. See Section 01340.

PART 2 - PRODUCTS

2.1 PIPE

A. Reinforced Concrete Pipe (RCP) 12 IN to 24 IN:
   1. ASTM C76, Classes III, IV, and V.
   2. Joints: Bell and spigot with confined rubber O-ring gaskets: ASTM C443.

B. Reinforced Concrete Pipe (RCP) 27 IN to 120 IN:
   1. ASTM C76, Classes III, IV and V.
   2. Joints: Tongue and groove with preformed joint sealants: ASTM C990.

C. Spiral Rib Corrugated Metal Pipe (SRCMP) Polymer coated:
   1. Polymer coated steel, ASTM A742.
   2. Design: ASTM A796.
   3. Manufacture: ASTM A762.
   4. Ribs: External, helical, ¾ IN by ¾ IN by 7 ½ IN apart.
   5. Coupling bands

a. Polymer coated steel, ASTM A742.
b. Minimum 18 GA, 12 IN wide.
c. Corrugations spaced to index with re-rolled corrugations of the pipe.
d. Single Bar and strap fastener welded to band, polymer coated steel.
e. Fastening bolts: Two, ½ IN diameter minimum, stainless steel.
f. Gaskets: Rubber O-ring.

6. Bell and spigot joints:
   1) Bells:
      a) Welded to pipe prior to delivery.
      b) 6 IN minimum stab depth.
      c) Polymer coated steel, ASTM A742.
      d) Minimum 16 GA.
   2) Gasket:
      a) Field installed on spigot end.
      b) Fluted rubber.
      c) Type A Shore durometer hardness of 45 ±5.
7. 18 IN to 42 IN circular:
   a. Minimum cover to top of subgrade: 12 IN.
   b. Minimum additional cover required for construction loads: 24 IN.
   c. Polymer coated steel: 16 GA minimum.
8. 48 IN to 66 IN circular:
   a. Minimum cover to top of subgrade: 18 IN.
   b. Minimum additional cover required for construction loads: 30 IN.
   c. Polymer coated steel: 14 GA minimum.
9. 72 IN to 102 IN circular:
   a. Minimum cover to top of subgrade: 24 IN.
   b. Minimum additional cover required for construction loads: 30 IN.
   c. Polymer coated steel: 14 GA minimum.
10. 20 IN by 16 IN to 27 IN by 21 IN Arch Pipe:
    a. Minimum cover to top of subgrade: 12 IN.
    b. Minimum additional cover required for construction loads: 24 IN.
    c. Polymer coated steel: 16 GA minimum.
11. 33 IN by 26 IN to 40 IN by 31 IN Arch Pipe:
    a. Minimum cover to top of subgrade: 12 IN.
    b. Minimum additional cover required for construction loads: 24 IN.
    c. Polymer coated steel: 14 GA minimum.
12. 46 IN by 36 IN to 60 IN by 46 IN Arch Pipe:
    a. Minimum cover to top of subgrade: 12 IN.
    b. Minimum additional cover required for construction loads: 36 IN.
    c. Polymer coated steel: 12 GA minimum.

D. Spiral Rib Corrugated Metal Pipe (SRCMP) Aluminum:
1. Aluminum coil, ASTM B744.
2. Design: ASTM B790.
3. Manufacture: ASTM B745.
4. Ribs: External, helical, ¾ IN by ¾ IN by 7 ½ IN apart.
5. Coupling bands:
   a. Aluminum coil, ASTM B744.
   b. Minimum 16 GA, 12 IN wide.
   c. Corrugations spaced to index with re-rolled corrugations of the pipe.
   d. Single Bar and strap fastener welded to band, aluminum or stainless steel.
   e. Fastening bolts: Two, ½ IN diameter, stainless steel.
   f. Gaskets: Rubber O-ring.
6. Bell and spigot joints:
   1) Bells:
      a) Welded to pipe prior to delivery.

b) 6 IN minimum stab depth.
c) Aluminum coil, ASTM B744.
d) Minimum 16 GA.

2) Gasket:
a) Field installed on spigot end.
b) Fluted rubber.
c) Type A Shore durometer hardness of 45 ±5.

7. 18 IN to 30 IN circular:
   a. Minimum cover to top of subgrade: 12 IN.
   b. Minimum additional cover required for construction loads: 42 IN.
   c. Aluminum thickness: 14 GA minimum.
8. 36 IN to 54 IN circular:
   a. Minimum cover to top of subgrade: 18 IN.
   b. Minimum additional cover required for construction loads: 36 IN.
   c. Aluminum thickness: 12 GA minimum.
9. 60 IN to 72 IN circular:
   a. Minimum cover to top of subgrade: 24 IN.
   b. Minimum additional cover required for construction loads: 30 IN.
   c. Aluminum thickness: 10 GA minimum.
10. 78 IN to 84 IN circular:
   a. Minimum cover to top of subgrade: 30 IN.
   b. Minimum additional cover required for construction loads: 24 IN.
   c. Aluminum thickness: 10 GA minimum.
11. 20 IN by 16 IN to 23 IN by 19 IN Arch Pipe:
   a. Minimum cover to top of subgrade: 12 IN.
   b. Minimum additional cover required for construction loads: 30 IN.
   c. Aluminum thickness: 16 GA minimum.
12. 27 IN by 21 IN to 40 IN by 31 IN Arch Pipe:
   a. Minimum cover to top of subgrade: 18 IN.
   b. Minimum additional cover required for construction loads: 24 IN.
   c. Aluminum thickness: 14 GA minimum.
13. 46 IN by 36 IN to 60 IN by 46 IN Arch Pipe:
   a. Minimum cover to top of subgrade: 24 IN.
   b. Minimum additional cover required for construction loads: 30 IN.
   c. Aluminum thickness: 12 GA minimum.

2.2 BOX STRUCTURES

A. Cast in place concrete boxes for culverts and storm sewers:
   1. General use concrete: Section 03002
   2. Reinforcement: Section 03002.

B. Precast concrete boxes for culverts and storm drains:
   1. ASTM C1433.
   2. Joints: Tongue and groove joints with preformed joint sealants: ASTM C990.

2.3 INLETS, HEADWALLS, CATCH BASINS AND FLUMES

A. Cast in place inlets, headwalls, catch basins and flumes:
   1. General use concrete: Section 03002.
   2. Reinforcement: Section 03002.

B. Precast inlets, headwalls and catch basins:
   1. Design and manufacture: ASTM C913.
   2. Design loading: ASTM C890.

C. Junction boxes and Manholes: Section 02515.

D. SRCMP pre-manufactured inlet/outlet sections may be used with appropriate cast in place concrete headwalls, slope protection and/or safety end treatments.

2.4 PRECAST CONCRETE MANHOLES

A. Manhole Components:
   1. Precast concrete: ASTM C478.
   2. Minimum wall thickness: 5 IN.
   3. Minimum base thickness: 12 IN.
   4. Provide the following components for each manhole structure:
      a. Base (precast) with integral bottom section.
         1) Include flow channels from inlet to outlet.
         2) Bench shall have a minimum slope of 1 IN per FT.
      b. Precast barrel section(s).
      c. Precast adjuster ring(s).
      d. Precast concrete transition section or precast flat top.
   5. Joints: Resilient O-ring gaskets manufactured from natural or synthetic materials complying with ASTM C443.
   6. Inside diameter as specified on Drawings to accommodate piping, 48 IN minimum.

B. Standard Frame and Cover:
   1. Gray Iron frame and cover: ASTM A48, Class 30 B.
   2. Frame weight: 220 lbs ±5 lbs.
   3. Lid weight: 200 lbs. ±5 lbs.
   4. Design: HS20 Loading minimum..
   5. Machine all horizontal mating surfaces.
   6. Furnish unit with solid non-ventilated lid with non-penetrating holes or slots for removal of cover.
   7. Letter covers: "STORM DRAIN".
   8. Opening:
      a. Circular
      b. Standard: 24 IN Diameter, clear.
      c. Designed for personnel access: 30 IN Diameter, clear.

C. Pressure Tight Frame and Cover:
   1. Gray Iron frame and cover: ASTM A48, Class 30 B.
   2. Frame weight: 220 lbs ±5 lbs.
   3. Lid weight: 200 lbs ±5 lbs.
   4. Design: HS20 Loading minimum.
   5. Machine all horizontal mating surfaces.
   6. Furnish unit with solid non-ventilated lid with non-penetrating holes or slots for removal of cover.
   7. Letter covers: "STORM DRAIN".
   8. Opening:
      a. Circular
      b. Standard: 24 IN Diameter, clear.
      c. Designed for personnel access: 30 IN Diameter, clear.
   9. Secure lid to frame with:
      a. Stainless steel bolts.
      b. 5/8 IN DIA by 1-3/4 IN long.
      c. ASTM F593, Type 316 or 316L.
   10. Provide solid lid and minimum 5/16 IN DIA neoprene O-ring gasket set in a 1/4 IN deep groove.
   11. Designed for 14 PSI pressure or vacuum.
   12. Furnish frame with a minimum of four anchorage holes and four 3/4 IN DIA stainless steel anchor bolts of sufficient length to secure frame to manhole cone section with a minimum embedment of 6 5/8 IN.

a. Include epoxy capsule for anchor.
b. Hilti HVU or equal.

D. Pipe Connectors: ASTM C923.
1. For connecting pipes to holes cored in existing manholes use approved Link Seal connectors manufactured by Thunderline Link-Seal, or approved equal.

E. Grade adjustment rings
1. Reinforced concrete grade adjustment rings: ASTM C478.
2. Free from cracks, voids, and other defects.
3. Inside diameter: to match manhole frame and cover.
4. Seal between rings and between rings and manhole section with pre-molded butyl rubber sealant.
5. Use at least two grade adjustment rings for a minimum of 4 IN and no more than 4 rings for a maximum of 12 IN.

PART 3 - EXECUTION

3.1 PREPARATION

A. Comply with Section 02221.

3.2 INSTALLATION

A. Install products in accordance with manufacturer's instructions.

B. Comply with Section 02221.

C. Reinforced concrete pipe (RCP):
1. 12 IN to 24 IN:
a. Lubricate gaskets and use pipe puller to pull pipe joints together.
b. Avoid damaging pipe by pushing.
c. Gap at joints shall not exceed 1 IN.
2. 27 IN to 120 IN:
a. Install pre-formed joint sealant of size and quantity specified by pipe manufacturer.
b. Install sealant in accordance with manufacturer’s instructions.
c. Avoid damage to pipe caused by pushing, use pipe puller to pull pipe joints together.
d. Gap at joints on inside of pipe shall not exceed 1 IN.
e. Preformed joint sealant shall be squeezed out along the full circumference of the completed joint.

D. Spiral Rib Corrugated Metal Pipe (SRCMP):
1. Install in accordance with ASTM A798 and Section 02221.
2. Follow pipe manufacturer’s written instructions for installation.
3. Compact bedding material and initial backfill in lifts per Section 02221. Pay special attention to the compaction and consolidation of the bedding in the haunches of pipe and arch.
4. Use appropriate equipment to consolidate and compact the initial backfill.
a. Do not overload pipe with compaction equipment.
b. Monitor deflection as backfill is placed over pipe.
c. Provide minimum cover with bedding and initial backfill material.
5. Bell and Spigot Joints:
a. Begin at downstream end and work upstream.
b. Lay pipe with bell end pointing upstream.
c. Install gaskets on spigot ends and lubricate before pushing spigot end into bell.
6. Banded joints:
a. Wrap band around end of pipe in place and fit loosely with bolts.
b. Place next joint of pipe into end of band to within 1 IN of first pipe.

c. Check alignment of pipes, adjust so that band conforms to corrugations.
d. Pull band tight and tighten bolts to complete joint.

7. Spacing of multiple pipes:
   a. Up to 24 IN diameter or span: 12 IN minimum.
   b. 24 to 72 IN: minimum ½ of pipe diameter or span.
   c. Over 72 IN diameter: 36 IN minimum.

E. Reinforced concrete boxes:
1. Cast in place boxes: Section 03002.
   a. Interior and exposed surfaces: grout cleaned finish.
2. Precast boxes:
   a. Install in accordance with manufacturer's instructions.
   b. Install pre-formed joint sealant of size and quantity specified by the box manufacturer.
   c. Install sealant in accordance with manufacturer's instructions.
   d. Avoid damage to boxes caused by pushing; use pipe puller to pull sections together.
   e. Gap at joints on inside of box shall not exceed 1 IN.
   f. Preformed joint sealant shall be squeezed out along the full perimeter of the completed joint.

F. Inlets, headwalls, catch basins and flumes:
1. Cast in place: Section 03002.
   a. Chamfer all exposed edges: ¾ IN.
   b. Exposed surfaces: grout cleaned finish.
   c. Grout seal connections to pipes and boxes.
   d. Grout bottom to slope to outlet.
2. Precast:
   a. Install on grade, level and plumb.
   b. Seal mated joints to pipes and boxes with preformed joint sealant.
   c. Grout seal connections to pipes and boxes.
   d. Grout bottom to slope to outlet.
   e. Seal joints in with preformed joint sealant.
   f. Preformed joint sealant shall be squeezed out along the full perimeter of the completed joint.

3.3 MANHOLE CONSTRUCTION

A. Build each manhole to dimensions shown on plans and at such elevation that pipe sections built into wall of manhole will be true extensions of line of pipe.

B. Install precast concrete manhole sections with gaskets according to ASTM C891.

C. Seal mating surfaces of concrete and concrete and metal:
1. Trowel apply to clean surface black mastic joint compound to a minimum wet thickness of 1/4 IN immediately prior to mating the surfaces.
2. Apply pre-molded butyl rubber sealant to both surfaces.

D. Install manhole sections with pre-molded butyl rubber sealant in addition to resilient O-ring type gasket Use approved gasket lubricant on precast manhole section O-rings.

E. Place grade adjustment rings on top of top cone section of manhole to set frame and cover at final grade. If other work will be completed before setting rings and frame and cover, provide temporary cover over manhole opening to prevent depositing debris in manhole and provide a safe work environment.

F. Anchor manhole frame and cover on Pressure Tight Manholes with stainless steel epoxy anchor bolts.

G. Seal all pipe penetrations in manhole with resilient pipe connectors. Grout remaining space around pipe, between pipe and manhole wall, flush with the manhole wall and the formed manhole invert channels to form a smooth flow path between the pipe and the manhole.

H. Set tops of frames and covers flush with finished surface of manholes that occur in pavements. Set tops 1-3 inches above finished surface elsewhere, unless otherwise indicated.

3.4 INSTALLATION TOLERANCES

A. Pipes, Arch and Boxes:
   1. Maximum variation from plan slope: 1/8 IN in 10 FT.
   2. Maximum deviation from plan elevation: 0.04 FT.
   3. Maximum deviation from true line:
      a. Pipe diameter less than 15 IN: 0.20 FT.
      b. Pipe diameter greater than 15 IN: 0.40 FT.
      c. Boxes: 0.40 FT.
      d. Corrections shall not exceed 0.10 FT per length of conduit.

B. SRCMP:
   1. Deflection:
      a. Vertical: Maximum 5% of pipe diameter or arch rise.
      b. Horizontal: Maximum 3% of pipe diameter or arch span.

C. Manholes:
   1. Horizontal position: within ± 0.25 FT of plan northing and plan easting position measured at the center of the manhole base.
   2. Vertical position: within ± 0.08 FT of plan vertical elevation measured at the invert of the pipe out of the manhole.
   3. Plumb: Manhole shall be plumb vertically within ± 0.02 FT in 6 FT of depth measured at the center of the top and center of the base for concentric cone manholes and along the wall at the tallest point of eccentric cone manholes.

D. As construction progresses, survey manholes, pipe, arches and boxes to ensure construction within tolerances. Correct construction not within tolerance.

3.5 FIELD QUALITY CONTROL

A. Verify and coordinate with installation.

B. Exfiltration/Infiltration Test: ASTM C969.
   1. In lieu of the exfiltration/infiltration test, a low pressure air test may be performed: ASTM C924.
   2. Pipes larger than 24 IN may be accepted by visual inspection performed by City of Boerne Construction Inspector.
   3. Small diameter pipes not passing exfiltration/infiltration test may be repaired by sealing joints with an external sealing band per ASTM C 877.

C. Lamp Test:
   1. Each section between manholes will be lamped by Engineer.
   2. Furnish suitable assistants to help Engineer.
   3. A minimum of 95 percent of a true circle will be required in the lamp test to indicate a properly constructed pipeline.
   4. Repair any sections not passing the lamp test.
   5. Any section of SRCMP that appears to have excessive deflection shall be tested for deflection as directed by the Engineer or the City of Boerne.

D. Deflection testing of SRCMP:
   1. Apparatus:
      a. Deflectometer: capable of measuring the pipe deflection vertically and horizontally.
      b. Other method that can measure accurately the vertical diameter of the pipe or rise of the arch and that can measure accurately the horizontal diameter of the pipe or span of the arch.
      c. Approved by the City of Boerne.
   2. Measure deflection using an approved apparatus.

3. Identify pipe and arch sections that do not meet deflection tolerances.
4. Remove and replace pipe and arch not meeting tolerances with new pipe or arch. A greater wall thickness pipe or arch may be required for replacement to ensure new pipe will meet tolerances.

E. Manholes: Perform vacuum test according to ASTM C1244.
1. Seal all lift holes and other openings in manhole.
2. Test manhole before grouting horizontal joints.
3. Temporarily plug all pipes entering the manhole.
4. Place testing machine on top of manhole in accordance with manufacturer's instructions.
5. Secure testing machine with torque wrench per manufacturer's instructions.
6. Draw a vacuum of 10 IN of mercury on the manhole.
7. Turn vacuum pump off and measure the time it takes for the vacuum to drop from 10 IN of mercury to 9 IN of mercury.
8. If more than two minutes passes and the vacuum is at least 9 IN of mercury, the manhole passes.

F. In case of conflict, do not relocate piping without prior approval from the Engineer and the City of Boerne.

END OF SECTION

SECTION 02444
CHAIN LINK FENCE AND GATES

PART 1 - GENERAL

1.1 SUMMARY

A. Section Includes:
   1. Chain link fencing and gates.

B. Related Sections include but are not necessarily limited to:
   1. Division 0 - Bidding Requirements, Contract Forms, and Conditions of the Contract.
   2. Division 1 - General Requirements.
   3. Section 02200 - Earthwork.
   4. Section 03002 - Concrete.

1.2 QUALITY ASSURANCE

A. Referenced Standards:
   1. American Society for Testing and Materials (ASTM):
      a. A121, Standard Specification for Metallic-Coated Carbon Steel Barbed Wire.
      b. A153, Standard Specification for Zinc Coating (Hot-Dip) on Iron and Steel Hardware.
      c. A392, Standard Specification for Zinc-Coated Steel Chain-Link Fence Fabric.
      d. A824, Standard Specification for Metallic-Coated Steel Marcelled Tension Wire for use with Chain-Link Fence.
      e. F552, Terminology Relating to Chain-Link Fencing.
      f. F567, Standard Practice for Installation of Chain Link Fence.
      g. F626, Standard Specification for Fence Fittings.
      h. F654, Standard Specification for Residential Chain Link Fence Gates.
      i. F900, Standard Specification for Industrial and Commercial Swing Gates.
      j. F1043, Standard Specification for Strength and Protective Coatings on Steel Industrial Chain Link Fence Framework.
      k. F1184, Standard Specification for Industrial and Commercial Horizontal Slide Gates.
   2. Chain Link Manufacturer's Institute for "Galvanized Steel Chain Link Fence Fabric and Accessories."

B. Qualifications:
   1. Installer bonded and licensed in the Project state.
   2. Installer shall have a minimum 2 years experience installing similar fencing.
   3. Utilize only AWS certified welders.
   4. Electric gate operators to be UL listed.
   5. Grounding by an electrician licensed in Project state.

1.3 DEFINITIONS

A. See ASTM F552.

B. NPS: Nominal pipe size, in inches.

C. Installer or Applicator: Installer or applicator is the person actually installing or applying the product in the field at the Project site.
   1. Installer or applicator are synonymous.

1.4 SUBMITTALS

A. Shop Drawings:
   1. See Section 01340.

2. Product technical data including:
    a. Acknowledgement that products submitted meet requirements of standards referenced.
    b. Manufacturer's installation instructions.
3. Scaled plan layout showing spacing of components, accessories, fittings, and post anchorage.
4. Mill certificates.
5. Source quality control test results.
6. Automatic gate system:
    a. Electrical circuitry and control wiring.
    b. Intercom system.
    c. Detector loop layout.
    d. Locking plan.
    e. Method of installation of detector loop.
    f. Sealant material for detector loops.

B. Operation and Maintenance Manuals:
1. See Section 01340.

PART 2 - PRODUCTS

2.1 ACCEPTABLE MANUFACTURERS

A. Subject to compliance with the Contract Documents, the following manufacturers are acceptable:
1. Fence systems:
    a. Southwestern Wire.
    b. Master Halco, Inc.
    c. Hoover Fence Co..
    d. Or approved equal.
2. Electric gate operators:
    a. Richards - Wilcox.
    b. Robot Industries, Inc.
    c. Electric Operators.
    d. Or approved equal.

B. Submit requests for substitution in accordance with Specification Section 01640.

2.2 COMPONENTS

A. Residential Chain Link Fabric:
1. Fabric type:
    a. ASTM A392 zinc-coated steel:
        1) Coated before weaving, 2.0 OZ/SF.
2. Wire gage: 9 or 11.
3. Mesh size: 2 IN.
4. Selvage treatment:
    a. Top: Knuckled.
    b. Bottom: Knuckled.

B. Commercial/Industrial Chain Link Fabric:
1. Fabric type
    a. ASTM A392 zinc-coated steel:
        1) Coated before weaving, 2.0 OZ/SF.
2. Wire gage: 9.
3. Mesh size: 2 IN.
4. Selvage treatment:
    a. Top: Knuckled.

b. Bottom: Twisted and barbed.

C. Concrete: See Section 03002.

D. Framework:
1. Residential Fence:
a. Fence Height: As indicated on Drawings, less than 6 feet.
b. External protective coating:
1) minimum 0.6 OZ/SF zinc chromate conversion coating.
2) Clear verifiable polymer film.
c. Internal protective coating:
1) Minimum 0.6 OZ/SF zinc.
d. Top rail: D = 1 3/8 IN, 16 Gauge.
e. Line posts: D = 1 5/8 IN, 16 Gauge.
f. Terminal posts and corners: D = 2 3/8 IN, 16 Gauge.
g. Swing gate posts: D = 2 3/8 IN, 16 Gauge.
2. Commercial/Industrial Fence: ASTM F1043: Heavy Industrial.
a. Fence Height: As indicated on Drawings.
b. Framework materials: Group IA.
c. External Coating: Type A.
d. Internal Coating: Type A.
e. Rails and Braces: D = 1 5/8 IN.
f. Line posts: D = 2 3/8 IN.
g. Terminal posts and corners: D = 3 IN.
h. Swing gate posts: size per ASTM F900, Min. D = 3 IN.
i. Sliding gate posts: size per ASTM F1184.

E. Tension Wire:
1. Top and bottom of fabric:
a. Metallic-coated Steel: ASTM A824, Type I.
1) Same coating as fence fabric.

F. Fence Fittings (Post and Line Caps, Rail and Brace Ends, Sleeves-Top Rail, Tie Wires and Clips, Tension and Brace Bands, Tension Bars, Truss Rods):
1. ASTM F626.

G. Residential Fence Gates: ASTM F654
1. Type: As indicated on Drawings.
2. Metal Pipe and Tubing: Galvanized Steel.
3. Posts: round, galvanized steel.
4. Hardware:
a. Latches permitting operation from both sides of gate.
b. Hinges: 1 Pair.
5. External protective coatings:
a. minimum 0.6 OZ/SF zinc chromate conversion coating.
b. Clear verifiable polymer film.
6. Internal protective coating:
a. Minimum 0.6 OZ/SF zinc.

H. Commercial/Industrial Swing Gate:
1. ASTM F900.
2. Materials as specified for fence framework and fabric.
3. Hardware:
a. Galvanized per ASTM A153.
b. Hinges to permit 180-degree outward gate opening.
c. Latches that permit locking for single leaf gates.
d. Center post with strike set in concrete and locking hole for double leaf gates.

I. Sliding Cantilever Gate: ASTM F1184.

1. Type II, cantilever slide, Class 1 with external roller assemblies.
2. Provide hardware to facilitate locking.

J. Barbed Wire:
1. Three strands.
2. Galvanized steel:
   a. ASTM A121.
   b. Class 3, Type Z coating.
   c. Four-point barbs.

K. Barbed Wire Extension Arms:
1. ASTM F626.
2. Accommodate three strands of barbed wire.
3. Extend at a 45-degree angle outside of the fence line.

PART 3 - EXECUTION

3.1 INSTALLATION

A. Install in accordance with:
1. Manufacturer's instructions.
2. Lines and grades shown on Drawings.
3. In accordance with ASTM F567.

B. Do not start fence installation before final grading is complete and finish elevations are established.

C. Drill holes in firm, undisturbed or compacted soil.
1. Minimum 3 FT-6 IN deep and 2 FT diameter.
2. Set posts in concrete a minimum of 3 FT below grade.
3. Crown top of concrete footing 1 IN.

D. Place fence with bottom edge of fabric between 1 IN and 2 IN above grade. Correct minor irregularities in earth to maintain maximum clearance of 2 IN.

E. If a mow strip is indicated, install with top level between posts to maintain constant clearance from bottom edge of fabric.

F. Space line posts at equal intervals not exceeding 10 FT OC.

G. Provide post braces for each gate corner pull and terminal post and first adjacent line post.

H. Install tension bars full height of fabric.

I. Rails: Fit rails with expansion couplings of outside sleeve type.
1. Rails continuous for outside sleeve type for full length of fence.

J. Provide expansion couplings in top rails at not more than 20 FT intervals.

K. Anchor top rails to main posts with appropriate wrought or malleable fittings.

L. Install bracing assemblies at all end and gate posts, as well as side, corner, and pull posts.
1. Locate compression members at mid-height of fabric.
2. Extend diagonal tension members from compression members to bases of posts.
3. Install so that posts are plumb when under correct tension.

M. Pull fabric taut and secure to posts and rails.
1. Secure so that fabric remains in tension after pulling force is released.
2. Secure to posts at not over 15 IN OC, and to rails at not over 24 IN OC, and to tension wire at not over 24 IN OC.

3. Use U-shaped wire conforming to diameter of pipe to which attached, clasping pipe and fabric firmly with ends twisted at least two full turns.
4. Bend ends of wire to minimize hazards to persons or clothing.

N. Install post top at each post.

O. Gates:
1. Construct with fittings or by welding.
2. Provide rigid, weatherproof joints.
3. Assure right, non-sagging, non-twisting gate.
4. Coat welds with rust preventive paint, color to match pipe.
5. Install concrete center stop on double leaf gates.

END OF SECTION

SECTION 02502

CONCRETE PAVEMENT, CURB, DRIVEWAY, SIDEWALK AND STEPS

PART 1 - GENERAL

1.1 SUMMARY

A. Section Includes:
   1. Concrete pavement, curb, driveway, sidewalk, and steps.

B. Related Sections include but are not necessarily limited to:
   1. Division 0 - Bidding Requirements, Contract Forms, and Conditions of the Contract.
   2. Division 1 - General Requirements.
   3. Section 03002 - Concrete.

C. Payment Adjustment for Deficient Thickness of Concrete Pavement:
   1. A deduction in price shall be made for each lane of concrete pavement 1 block (400 FT) or more in length, or for any lane less than 1 block (400 FT) in total length, if the average concrete pavement thickness, when determined as provided herein, is within 1 IN tolerance but not within the 1/4 IN tolerance permitted.
      a. Payment reduction formula:

      Payment = (Contract Price) [-2x(d/ts)x(Contract Price)]

      Where d = thickness deficiency determined by coring = ts - ta, but less than 1 IN
      ts = design thickness
      ta = actual thickness determined by coring

   2. When any core shows a deficiency of more than 1 IN, the length of adjacent pavement deducted, and for which payment shall be withheld, shall be the sum of the distance, measured parallel to the centerline, from the deficient boring to the nearest borings, in both directions, which show a thickness not more than 1 IN deficient.
   3. Deductions in all cases shall be for the full width of the lane which the borings represent.

1.2 QUALITY ASSURANCE

A. Referenced Standards:
   1. American Association of State Highway and Transportation Officials (AASHTO):
      a. M153, Standard Specification for Preformed Sponge Rubber and Cork Expansion Joint Fillers (ASTM D1752) for Concrete Paving and Structural Construction.
      b. M182, Burlap Cloth Made from Jute or Kenef.
      c. M213, Standard Specification for Preformed Expansion Joint Fillers (ASTM D1751) for Concrete Paving and Structural Construction.
      d. M224, Protective Coatings for Portland Cement Concrete.
      e. M233, Boiled Linseed Oil Mixture for Treatment of Portland Cement Concrete.
   2. American Concrete Institute (ACI):
      a. 305R, Hot Weather Concreting.
      b. 306R, Cold Weather Concreting.
      c. 325, Recommended Practice for the Design of Concrete Pavements.
   3. American Society for Testing and Materials (ASTM):
      a. A185, Standard Specification for Steel Welded Wire Fabric, Plain, for Concrete Reinforcement.
      b. A615, Standard Specification for Deformed and Plain Billet-Steel Bars for Concrete Reinforcement (Including Supplementary Requirements S1).
      c. C33, Standard Specification for Concrete Aggregates.

d. C150, Standard Specification for Portland Cement.
e. C171, Standard Specification for Sheet Materials for Curing Concrete.
f. C174, Measuring Length of Drilled Concrete Cores.
g. C309, Standard Specification Liquid Membrane-Forming Compounds for Curing Concrete.
h. C679, Standard Test Method for Tack-Free Time of Elastomeric Sealants.
i. D1557, Standard Test Methods for Laboratory Compaction Characteristics of Soil Using Modified Effort (56,000 ft-lbf/ft^3 (2,700 kN-m/m^3))
j. D1751, Standard Specification for Preformed Expansion Joint Filler for Concrete Paving and Structural Construction (Nonextruding Bituminous Type).
k. D1752, Standard Specification for Preformed Sponge Rubber and Cork Preformed Expansion Joint Filler for Concrete Paving and Structural Construction.
l. D4253, Standard Test Methods for Maximum Index Density of Soils Using a Vibratory Table.
m. D4254, Test Methods for Minimum Index Density of Soils and Calculation of Relative Density.

4. Texas Department of Transportation (TxDOT)
   a. DMS-6310, Department Materials Specification for Joint Sealants and Fillers.
   b. TEX-525-C, Test procedure for Tests for Asphalt and Concrete Joint Sealers.
5. Federal Specification (FS):
   a. SS-S-1614, Sealants, Joint, Jet-Fuel-Resistant, Hot-Applied for Portland Cement and Tar Concrete Pavements.
   b. TT-P-115, Paint, Traffic (Highway, White and Yellow).
   c. TT-S 00227 E(3), Sealing Compound: Elastomeric Type, Multi-Component (for Calking, Sealing, and Glazing in Buildings and Other Structures.

1.3 SUBMITTALS

A. Shop Drawings:
   1. See Section 01340.
   2. Product technical data including:
      a. Acknowledgement that products submitted meet requirements of standards referenced.
      b. Manufacturer's installation instructions.
   3. Mix design(s) in accordance with Sections 03002.
   4. Qualifications of concrete installer.
   5. Drawings detailing all reinforcing.
   6. Scaled cross section detail of crown template with dimensions showing off sets from level line.
   7. Concrete pavement joint pattern for paved areas.
   8. Test reports:
      a. Concrete cylinder test results from field quality control.

B. Samples:
   1. See Section 01340.
   2. Samples of fabricated jointing materials and devices.

PART 2 - PRODUCTS

2.1 MATERIALS

A. Portland Cement:
   1. ASTM C150, Type I or II.

B. Aggregates:
   1. For Curb: ASTM C33, gradation size No. 7, 1/2 to No. 4.
   2. For all other concrete: ASTM C33, gradation size #67, 3/4 IN to #4.

3. Clean, crushed gravel.

C. Water:
1. Potable quality.

D. Admixtures:
1. Comply with Section 03002.

E. Reinforcing Bars:
1. ASTM A615, Grade 60.

F. Welded Wire Fabric:
1. ASTM A185.
2. Flat.
3. Clean, free from dirt, scale, rust.

G. Preformed Joint Filler:
1. Preformed fiber sheets:
   a. Expansion joint filler will low extrusion and substantial recovery after compression.
   b. ASTM D1751.
2. Rebonded neoprene filler:
   a. Closed cell neoprene particles rebonded and molded into sheets.
   b. ASTM D1752, type I.
3. Rebonded recycled tire rubber:
   a. Granular rubber particles, made from grinding recycled tires from automobiles and trucks, bound together by a plastic resin or plastic binder.
   b. Meets testing requirements of ASTM D1751 and D1752 except asphalt content and expansion requirements.

H. Joint Sealant for asphalt to concrete joints:
1. Silicone or Polyurethane.
2. Single component.
3. Self-leveling.
4. TxDOT DMS-6310 Class 8.
5. Tack free in 180 minutes maximum, ASTM C679.
6. Nonvolatile content: 93% minimum, TEX-525-C.
7. Tensile Strength, TEX-525-C:
   a. Initial cure time: 6-days.
   b. Strength after air curing only: 3 psi minimum, 10 psi maximum.
   c. Strength after water immersion: 3 psi minimum, 10 psi maximum.
   d. Strength after oven aging: 3 psi minimum, 10 psi maximum.
   e. Strength after bond test: 3 psi minimum, 10 psi maximum.
   f. 24-HR Extension test: Pass.

I. Joint Sealant for concrete to concrete joints:
1. Silicone or Polyurethane.
2. Single component.
3. Self-leveling.
4. TxDOT DMS-6310 Class 5.
5. Tack free in 180 minutes maximum, ASTM C679.
6. Nonvolatile content: 93% minimum, TEX-525-C.
7. Tensile Strength, TEX-525-C:
   a. Initial cure time: 6-days.
   b. Strength after air curing only: 4 psi minimum, 30 psi maximum.
   c. Strength after water immersion: 4 psi minimum, 30 psi maximum.
   d. Strength after oven aging: 4 psi minimum, 30 psi maximum.
   e. Strength after bond test: 4 psi minimum, 30 psi maximum.
   f. 24-HR Extension test: Pass.

J. Membrane Curing Compound:
   1. ASTM C309.

K. Cover Materials for Curing:
   1. Burlap:
      a. AASHTO M182.
      b. Minimum Class 2, 8 0Z material (1 YD x 42 IN).
   2. Polyethylene film:
      a. ASTM C171.

L. Subgrade Cover:
   1. Polyethylene film: ASTM C171.

M. Concrete Treatment:
   1. Boiled linseed oil mixture.
   2. AASHTO M233.

N. Traffic Paint:
   1. Fed Spec TT-P-115, Type 1 - Alkyd.

O. Forms:
   1. Steel or wood.
   2. Size and strength to resist movement during concrete placement and able to retain horizontal and vertical alignment.
   3. Free of distortion and defects.
   4. Full depth.
   5. Metal side forms:
      a. Minimum 7/32 IN thick.
      b. Depth equal to edge thickness of concrete.
      c. Flat or rounded top minimum 1-3/4 IN wide.
      d. Base 8 IN wide or equal to height, whichever is less.
      e. Maximum deflection 1/8 IN under center load of 1,700 LBS.
      f. Use flexible spring steel forms or laminated boards to form radius bends.

2.2 MIXES

A. Mix design to provide 4,000 psi 28-day compressive strength, 3 IN $\pm$1 IN slump.

B. Comply with Section 03002.

PART 3 - EXECUTION

3.1 PREPARATION

A. Subgrade Preparation:
   1. Prepare using methods, procedures, and equipment necessary to attain required compaction densities, elevation and section.
   2. Scarify and recompact top 6 IN of fills and embankments which will be under paved areas.
   3. Remove soft or spongy areas.
   4. Replace with aggregate material.
   5. Compact to the following densities:
      a. Cohesive soils: 95 percent per ASTM D1557.
      b. Non-cohesive soils: 85 percent relative per ASTM D4253 and D4254.
   6. Assure moisture content is within limits prescribed to achieve required compaction density.
   7. Following compaction, trim and roll to exact cross section. Check with approved grading template.
   8. Perform density tests on subgrade to determine that subgrade complies with the specification.

B. Aggregate Course:
   1. Place material in not more than 6 IN thick layers.
   2. Spread, shape, and compact all material deposited on the subgrade during the same day.
   3. Compact to 80 percent relative per ASTM D4253 and D4254, or 95 percent maximum dry density per ASTM D1557, as applicable.

C. Loose and Foreign Material:
   1. Remove loose and foreign material immediately before application of paving.

D. Appurtenance Preparation:
   1. Block out or box out curb inlets and curb returns.
   2. Provide for joint construction as detailed and dimensioned on Drawings.
   3. Adjust manholes, inlets, valve boxes and any other utility appurtenances to design grade.
      a. Secure to elevation with concrete.
      b. Place concrete up to 5 IN below design grade.
   4. Headers:
      a. Construct at open ends of pavements.
      b. Use same concrete to construct headers as that used in the abutting structure.
      c. Extend header full width of pavement and crown same as pavement.
   5. Clean and oil forms.

3.2 INSTALLATION

A. Concrete Production:
   1. Comply with Section 03002.

B. Forms:
   1. Form support:
      a. Compact soil foundation and cut to grade to support forms and superimposed machine loads.
      b. Use bearing stakes driven flush with bottom of form to supplement support as necessary.
      c. Do not use earth pedestals.
   2. Staking forms:
      a. Joint forms neatly and tightly.
      b. Stake and pin securely with at least three pins for each 10 FT section.
   3. Clean and oil forms prior to placement of concrete.
   4. Set forms sufficiently in advance of work (minimum of 2 HRS) to permit proper inspection.
   5. Previously finished concrete pavement, curb or sidewalk contiguous with new work may serve as side form when specifically approved.

C. Reinforcing:
   1. Locate longitudinal edge bars between 3 and 6 IN from edge of slab.
   2. Lap mats two full spaces plus 2 IN.
   3. Tie end transverse member of upper mat securely to prevent curving.
   4. Lap non-welded bars a minimum of 42 times the bar diameter.
   5. Support:
      a. Place bars and heavy mats securely on chairs or concrete bricks at called-for height.
      b. Support flat sheets of reinforcing fabric with concrete bricks or chairs at the called for height. Provide sufficient support to prevent sagging between supports when concrete is placed. .

D. Joints:
   1. Hold joint location and alignment to within ±1/4 IN.
   2. Finish concrete surface adjacent to previously placed slab to within ±1/8 IN, with tooled radius of 1/4 IN.
   3. Metal keyway joints:
      a. Form by installing metal joint strip left in place.

b. Stake and support like side form.
c. Provide dowels or tie bars.
d. Saw ¼ IN wide by ½ IN deep groove adjacent to keyway in green concrete and seal after concrete cures.

4. Weakened plane joints (Contraction Joints):
   a. Tooled joints for sidewalk, driveway and curb only:
      1) Form groove in freshly placed concrete with tooling device.
      2) Groove dimensions shall be 3/8 IN at surface and 1/4 IN at root.
   b. Sawed joints for pavement and driveway:
      1) Saw 1/4 IN wide groove in green concrete.
      2) Commence sawing as soon as concrete is hard enough to withstand operation without chipping, spalling or tearing, regardless of nighttime or weather, within 18 hours of concrete placement.
      3) Thoroughly wet surface to protect membrane cure and recoat afterward.
      4) Complete saw cutting before shrinkage stresses cause cracking.
   c. Location:
      1) At 10 FT intervals for pavement less than 6 IN thick.
      2) At 12 FT intervals for pavement 6 IN thick.
      3) At 14 FT intervals for pavement 7 IN thick.
      4) At 4 FT intervals for 4 FT wide sidewalks.
      5) At 5 FT intervals for 5 FT wide sidewalks.
      6) AT 6 FT intervals for 6 FT wide or wider sidewalks.
      7) At 10 FT intervals for driveway and curb.
5. Stake in place load transfer device for expansion joints consisting of dowels:
   a. Supporting and spacing means and premolded joint filler as per Drawing details.
   b. Located at 48 FT intervals and at all intersection curb returns.
   c. Provide preformed joint filler at all junctions with existing curb, sidewalk, steps, or other structures.
6. Install construction joints at end of day's work or wherever concreting must be interrupted for 30 minutes or more.
7. Thoroughly clean and fill sawed joints and expansion joints with joint sealing material.
   a. Install backer rod in joints deeper than ½ IN.
   b. Use backer rod of one size larger than joint width.
8. Fill joints without overflowing onto pavement surface.
9. Upper surface of filled joint to be flush to 1/8 IN below finish surface.

E. Place Concrete:
1. Comply with Section 03002.
2. Construct driveway openings, ramps, and other features as per Drawing details.

F. Cold and Hot Weather Concreting:
1. Cold weather:
   a. Cease concrete placing when descending air temperature in shade falls below 40 DegF.
   b. Do not resume until ambient temperature rises to minimum 40 DegF.
   c. If placing below 40 DegF is authorized by Engineer, maintain temperature of mix between 60 and 80 DegF.
   d. Heat aggregates or water or both.
   e. Water temperature may not exceed 175 DegF.
   f. Aggregate temperature may not exceed 150 DegF.
   g. Remove and replace frost damaged concrete.
   h. Salt or other antifreeze is not permitted.
   i. Comply with ACI 306R.
2. Hot weather:
   a. Cease concrete placing when plastic mix temperature cannot be maintained under 90 DegF.
   b. Aggregates or water or both may be cooled.

c. Cool water with crushed ice.
d. Cool aggregates by evaporation of water spray.
e. Never batch cement hotter than 160 DegF.
f. Comply with ACI 305R.

G. Finishing:
1. As soon as placed, strike off and screed to crown and cross section, slightly above grade, so that consolidation and finishing will bring to final Drawing elevations.
2. Maintain uniform ridge full width with first pass of first screed.
3. Pavement and similar surfaces:
   a. Float by longitudinally reciprocating float, passing gradually from edge to edge.
   b. Assure successive advances do not exceed half the length of the float.
   c. Test level of slab with minimum 10 FT straightedge.
   d. Fill depressions with fresh material, consolidate and refinish.
   e. Cut down high areas and retest.
   f. Belt surface with two-ply canvas belt, using transverse strokes while advancing along center line.
   g. Provide final finish by full width burlap or carpet drag, drawn longitudinally.
   h. Keep drag clean to avoid build up and consequent scarring.
   i. Tool pavement edges with suitable edger.
   j. Retest with straightedge and if pavement shows deviation of more than 1/8 IN in 10 FT, remove and replace.
4. Curb and similar surfaces:
   a. Bring curb to grade by running straightedge over steel templates with sawing motion.
   b. Float surface with a wood float to draw cement to surface.
   c. Broom finish after floating.
   d. Tool edges with suitable edger.
   e. Upon removal of forms, fill honeycombed or unevenly filled sections immediately with cement mortar.
   f. Assure that expansion joints are cleared of concrete.
5. Driveway, Sidewalk, steps, ramps, and similar surfaces:
   a. Test with 6 FT straightedges equipped with long handles and operated from off the sidewalk.
   b. Draw excess water and laitance off from surface.
   c. Float finish so as to leave no disfiguring marks but to produce a uniform granular or sandy texture.
   d. Broom finish after floating.
   e. Tool pavement edges with suitable edger.
   f. Provide exposed aggregate surfaces in areas indicated on the Drawings.
   g. Provide method such as abrasive blasting, bush hammering, or surface retarder acceptable to the Engineer.

H. Curing:
1. Apply membrane curing compound complying with ASTM C309, and in accordance with manufacturer's directions but at a minimum rate of one GAL per 200 SF.
2. Apply curing compound within 4 HRS after finishing or as soon as surface moisture has dissipated.
3. Cure for minimum of 7 days.
4. When average daily temperature is below 50 DegF, provide insulative protection of 12 IN minimum thickness loose dry straw, or equivalent, for 10 days.
5. Linseed oil sealant:
   a. For concrete pavement or sidewalk, seal surface with linseed oil.
   b. Apply linseed oil to clean surface as per AASHTO M224 after concrete has cured for 1 month.
   c. Apply first application at minimum rate of 67 SY per gallon.
   d. Apply second application to a dry surface at minimum rate of 40 SY per gallon.

I. Protection of Concrete:
   1. Protect concrete surfaces and appurtenances from all traffic for a minimum of 14 days.
   2. Erect and maintain warning signs, lights, and watchmen to direct traffic.
   3. Repair or replace parts of concrete surfaces damaged by traffic, or other causes, occurring prior to final acceptance.
   4. Protect concrete pavement against public traffic, construction traffic and traffic caused by employees and agents.
   5. No equipment shall be driven or moved across concrete surfaces unless such equipment is rubber-tired and only if concrete is designed for and capable of sustaining loads to be imposed by the equipment.
   6. Do not drive over new or existing concrete with tracked vehicles and equipment.

J. Painting and Striping:
   1. Stripe and mark pavement per the Drawings following sufficient cure time for pavement.
   2. Lay out markings with guidelines, templates, and forms.
   3. Apply 6 IN wide stripe with self-contained striping machine to a clean and dry pavement surface.
   4. Temperature must be above 40 DegF and precipitation should not be expected during drying period.
   5. Use yellow or white paint as approved complying with Fed Spec TT-P-115.
   6. Apply at 1 GAL per 105 SF.

K. Opening to Traffic:
   1. After 14 days, pavement may, at Owner's discretion, be opened to traffic if job cured test cylinders have attained a compressive strength of 3,000 LBS per square inch when tested in accordance with ASTM standard methods.
   2. Prior to opening to traffic, clean and refill joints as required with the specified filler material.

L. Clean Up:
   1. Assure clean up work is completed within 2 weeks after pavement has been opened to traffic.
   2. No new work will begin until clean up work has been completed, or is maintained within 2 weeks after pavement has been opened to traffic.

M. Pavement Patching:
   1. Comply with material and density requirements as mentioned elsewhere in this Specification except provide minimum 6 IN aggregate immediately below the patch.
   2. Place pavement patch providing a thickened edge.
   3. Assure that patch in plane of "cold" joint has a thickness 6 IN greater than that of the existing pavement.
   4. Extend patch under existing pavement for a distance of 6 IN minimum.
   5. Fill void under existing pavement with concrete.
   6. Undercut existing pavement 6 IN all around patch and to a depth of 6 IN.
   7. Prior to placing patch, sawcut edge of existing concrete to 1/4 depth and remove to provide a vertical face for a straight and true joint.

3.3 FIELD QUALITY CONTROL

A. Provide test cylinders in accordance with Section 03002 for each 50 CY of concrete placed or at a minimum two cylinders per days placement.

B. Pavement Thickness Testing:
   1. General:
      a. Core pavement to determine the actual thickness as directed by Engineer.
      b. Determine thickness by ASTM C174.
      c. Fill holes from removal of cores with concrete of the same mixture as specified.

d. Cost incidental to coring of cores showing a deficiency greater than 1/4 IN shall be paid by the Contractor.
e. Cost of cores showing a deficiency of 1/4 IN or less shall be paid by the Owner.
f. If average pavement thickness, as directed by core measurement, is outside specified tolerances, payment will be reduced per PART 1 of this Specification.
g. If deficiency in pavement thickness is 1 IN or more, remove and replace pavement at Contractor's expense.

2. Core categories:
   a. In determining the average thickness of acceptable pavement for which payment will be made, utilize the following core categories:

CATEGORY NUMBER	CORE THICKNESS IN RELATION TO DESIGN	CORE LENTGH USED IN CALCULATING
1	1 IN or more deficiency	NOT USED
2	Less than 1 IN deficiency through ½ IN excess	Actual Core Thickness
3	More than ½ IN excess	Design Thickness plus ½ IN

   b. Core sampling:
      1) Take cores in each lane in each block.
   c. Take cores at locations where the cement content was found to be low when checking the quantities of cement used during the progress of the work.
   d. Each separately poured lane of the pavement to be considered as a unit.
   e. A lane shall be considered to be the pavement surface between longitudinal construction joints, between a longitudinal construction joint and the edge, or between two pavement edges in cases where the entire width of the pavement is poured in one operation.
   f. Should any core show a deficiency in thickness in excess of 1 IN, check cores shall be taken 5 FT on either side of this location parallel to the centerline of the pavement.
   g. If both of these cores are within the 1 IN tolerance, no further special borings for this individual zone of deficiency will be made.
   h. If either one or both of these cores are not within the 1 IN tolerance, the procedure will be to cut cores in the following order on either side of the original short core parallel to the centerline of the pavement:
      1) 25 FT, 50 FT, the same to be measured from the location of original core found to be deficient in thickness, then at 50 FT intervals until a thickness within the 1 IN tolerance is found in both directions.
      2) On either side of the original deficient core, the procedure will then be to make a coring approximately half the distance within the first core which comes within the 1 IN tolerance.
      3) The above procedure shall be repeated until the station ($\pm$5 FT), at which the pavement comes within the 1 IN tolerance is located.
      4) If for some reason two or more cores are taken at the same station and at least one of them is beyond the 1 IN tolerance, the section of pavement at the station shall be considered as unacceptable.

END OF SECTION

SECTION 02511
SEAL COAT

PART 1 - GENERAL

1.1 SUMMARY

A. Section Includes:
   1. Seal coat of base or existing pavement with an asphalt seal armored with aggregate.

B. Related Sections include but are not necessarily limited to:
   1. Division 0 - Bidding Requirements, Contract Forms, and Conditions of the Contract.
   2. Division 1 - General Requirements.
   3. Section 02513 – Asphaltic Concrete Vehicular Pavement

1.2 QUALITY ASSURANCE

A. Referenced Standards:
   1. Texas Department of Transportation (TxDOT):
      a. Standard Specfications for Construction of Highways, Streets and Bridges.
         1) Item 300, “Asphalt, Oils, and Emulsions”.
         2) Item 302, “Aggregates for Surface Treatments”.
         3) Item 316, “Seal Coat”.

B. Miscellaneous:
   1. Should conflicts arise between standard specifications of government agencies mentioned herein and Contract Documents, Contract Documents shall govern.

1.3 SUBMITTALS

A. Shop Drawings:
   1. Product technical data including:
      a. Acknowledgement that products submitted meet requirements of standards referenced.
      b. Manufacturer's installation instructions.

PART 2 - PRODUCTS

2.1 MATERIALS

A. Base courses: Section 02513.

B. Asphalt Course:
   1. TxDOT Item 300.
   2. Emulsion: HFRS-2, HFRS-2P, CRS-2P or approved equal.
   3. Cool weather emulsion: RS-1P, CRS-1P or approved equal.

C. Aggregate Course:
   1. TxDOT Item 302.
   2. Type: E, crushed trap rock.
   3. First course of two course surface treatment: Grade 4.
   4. Final course: Grade 5.

D. Asphaltic Concrete course: Section 02513.

E. Pavement Marking Paint: Section 02513.

F. Glass Beads: Section 02513.

PART 3 - EXECUTION

3.1 INSTALLATION

A. Construct to line, grade and section as shown on Drawings and in accordance with referenced State Specifications.

B. Install Base material as indicated on the drawings, see Section 02513.

C. Asphalt application:
   1. Place in accordance with TxDOT Item 316.
   2. Clean all surfaces to be treated to remove dust and debris and maximize adhesion.
   3. Rate:
      a. Sole course: 0.30 GAL/SY.
      b. First course of two course surface treatment: 0.30 GAL/SY.
      c. Second course of two course surface treatment: 0.25 GAL/SY.
   4. Adjust application rate to provide uniform coverage without streaking, to maximize adhesion of the aggregates, and to minimize bleeding.

D. Aggregate application:
   1. Place in accordance with TxDOT Item 316.
   2. Rate:
      a. Sole course: 1 CY/90SY.
      b. First course of two course surface treatment: 1 CY/90 SY.
      c. Second course of two course surface treatment: 1 CY/100 SY.
   3. Adjust application rate to ensure that aggregate covers the asphalt completely and uniformly without rolling.
   4. Roll aggregate immediately after placement with at least 3 passes.
   5. Sweep surface treatment to remove excess and loose aggregate.

E. Two-course surface treatment:
   1. Provide when designated on plans.
   2. Allow first surface treatment to cure before applying second treatment.
   3. Place a second course of asphalt and aggregate as described above.

F. Asphaltic Concrete courses:
   1. Provide when designated on plans.
   2. Section 02513.

3.2 INSTALLATION TOLERANCES

A. Thickness: Compact the base material and asphaltic concrete pavement course to achieve the thickness specified within tolerances in Section 02513.

B. Surface Smoothness: Compact the base material and each subsequent course to produce a surface smoothness within the tolerances specified in Section 02513.

C. Asphalt application rate:
   1. Sufficient to completely cover base or previous course, and provide adherence of aggregate to previous course without bleeding through aggregate.

D. Aggregate application rate:
   1. Sufficient to completely cover asphalt with one layer of aggregate and prevent bleeding of asphalt through the aggregate.

3.3 PAVEMENT MARKING

A. See Section 02513.

3.4 FIELD QUALITY CONTROL

A. General:
   1. All testing must be performed under observation by the City of Boerne.
   2. Provide all testing that are referred to in TxDOT items as being performed by Engineer.

B. Test Base courses and Asphaltic Concrete course as indicated in Section 02513.

C. Coverage:
   1. Stop work if asphalt application is not uniform until problem is remedied and application is uniform again.
   2. Before rolling repair areas where coverage is incomplete. Apply asphalt with hand sprayer and shovel and rake aggregate to obtain complete coverage.
   3. Maintain area until Engineer and City of Boerne accept the work. Repair surface failures. Add additional aggregate and/or sand as required to stop asphalt from bleeding through to the surface.

END OF SECTION

SECTION 02512
SUBSURFACE DRAIN SYSTEM

PART 1 - GENERAL

1.1 SUMMARY

A. Section Includes:
   1. Street subsurface drain systems.
   2. Foundation drainage systems.

B. Related Sections include but are not necessarily limited to:
   1. Division 0 - Bidding Requirements, Contract Forms, and Conditions of the Contract.
   2. Division 1 - General Requirements.
   3. Section 02200 - Earthwork.
   4. Section 02221- Trenching, Backfilling, and Compacting for Utilities.
   5. Section 02423 - Storm Drainage System.

1.2 QUALITY ASSURANCE

A. Referenced Standards:
   1. American Association of State Highway and Transportation Officials (AASHTO).
      a. M278, Standard Specification for Class PS46 Polyvinyl Chloride (PVC) Pipe.
   2. American Society for Testing and Materials (ASTM):
      a. D3034 Specification for Type PSM Poly (Vinyl Chloride) (PVC) Sewer Pipe and Fittings.
      b. D4355 Standard Test Method for Deterioration of Geotextiles by Exposure to Light, Moisture and Heat in a Xenon Arc Type Apparatus.
      c. D4491 Standard Test Methods for Water Permeability of Geotextiles by Permittivity.
      d. D4533 Standard Test Method for Trapezoid Tearing Strength of Geotextiles.
      e. D4632 Standard Test Method for Grab Breaking Load and Elongation of Geotextiles.
      f. D6241 Standard Test Method for Static Puncture Strength of Geotextiles and Geotextile-Related Products Using a 50-mm Probe.

1.3 SYSTEM DESCRIPTION

A. Foundation Drainage System:
   1. System which drains by gravity, connects to and drains into storm drain system as shown on Drawings.

B. Street Subsurface Drainage System:
   1. System of subdrains under streets or adjacent to streets, drainage by gravity, connecting to storm drain system as shown on Drawings.

1.4 SUBMITTALS

A. Shop Drawings:
   1. See Section 01340.
   2. Fabrication and/or layout drawings:
      a. Layout diagram of drainage system(s).
   3. Product technical data including:
      a. Acknowledgement that products submitted meet requirements of standards referenced.
      b. Manufacturer's installation instructions.
      c. Type, size and manufacturer of drain pipe.
      d. Type, size and gradation of filter material.
      e. Type and manufacturer of filter fabric.

4. Certifications.
5. Test reports.

PART 2 - PRODUCTS

2.1 ACCEPTABLE MANUFACTURERS

A. Subject to compliance with the Contract Documents, the following manufacturers are acceptable:
   1. Geotextile Filter fabric:
      a. Mirafi 140N by Mirafi Inc.
      b. Propex 4545 by Amoco Fabrics Co.
      c. Or Approved equal.

2.2 DRAIN PIPE

A. Drain Pipe:
   1. Nominal diameter: 6 IN. min.
   2. Provide fittings whose thickness, weight, material and quality correspond to that of the drain pipe approved for use.
      a. PVC pipe: ASTM D3034, SDR 35 with gasketed joints.
      b. Perforations in accordance with AASHTO M278.

B. Filter Material: Washed open-graded gravel or crushed stone meeting the following sieve analysis:

SIEVE SIZE	PERCENT PASSING
1 IN	95 - 100
5/8 IN	0 - 10

A. Geotextile Filter Fabric:
   1. Nonwoven polypropylene fibers.
   2. Apparent opening size: 70-100 (U.S. Standard Sieve).
   3. Grab tensile strength: ASTM D4632 100 LBS minimum.
   4. Grab elongation: ASTM D4632 50% - 100%.
   5. Trapezoidal tear strength: ASTM D4533 35 LBS minimum.
   6. CBR puncture strength: ASTM D6241 300 LBS minimum.
   7. Permittivity: ASTM D4491 1.0 s^{-1} minimum.
   8. Flow rate: ASTM D4491 100 GPM/FT^2.
   9. UV Resistance: ASTM D4355 minimum 65% of strength retained at 500 HR.

PART 3 - EXECUTION

3.1 INSTALLATION

A. Lay filter fabric with 18 IN minimum laps at splices. Spread filter material in same direction as fabric overlap. Patch tears and holes in fabric with piece of same fabric material large enough to cover the tear or hole plus an 18 IN overlap.

B. Lay drain pipe lines firmly bedded in filter material to true grades and alignment with invert elevation shown on Drawings. Unless indicated otherwise on Drawings, install pipes level to point of discharge with perforations down and joints closed. Make joints with sleeve type couplings or tapered couplings. Provide couplings suitable for holding pipe firmly in alignment without use of sealing compounds or gaskets. Face bells upgrade away from point of discharge. Use 1/8 bends for change in direction; use Y fittings at intersections.

C. Test drain lines with water to assure free flow before covering. Remove obstructions and retest until satisfactory.

D. Provide filter material around drain pipes of depths and thicknesses shown on Drawings. Compact filter material with vibrator tamper to density required to preclude settlement and to avoid damage to drain pipe and to filter fabric. Avoid damage to foundation.

E. Install standard pipe (non-perforated) to catch basin in accordance with requirements of Section 02423.

END OF SECTION

SECTION 02513
ASPHALTIC CONCRETE VEHICULAR PAVING

PART 1 - GENERAL

1.1 SUMMARY

A. Section Includes:
   1. Asphaltic concrete vehicular paving.

B. Related Sections include but are not necessarily limited to:
   1. Division 0 - Bidding Requirements, Contract Forms, and Conditions of the Contract.
   2. Division 1 - General Requirements.

1.2 QUALITY ASSURANCE

A. Referenced Standards:
   1. American Association of State Highway and Transportation Officials (AASHTO):
      a. M-247, Specification for Glass Beads used in Traffic Paint.
      b. M-248, Specification for Ready-Mixed White and Yellow Traffic Paints.
   2. ASTM International (ASTM):
      a. D1556 Standard Test Method for Density and Unit Weight of Soil in Place by the Sand-Cone Method.
      b. D1557 Standard Test Methods for Laboratory Compaction Characteristics of Soil Using Modified Effort (56,000 ft-lbf/ft^3 (2,700 kN-m/m^3)).
      c. D2167 Standard Test Method for Density and Unit Weight of Soil in Place by the Rubber Balloon Method.
      d. D2937 Standard Test Method for Density of Soil in Place by the Drive-Cylinder Method.
      e. D3549 Standard Test Method for Thickness or Height of Compacted Bituminous Paving Mixture Specimens.
      f. D6938 Standard Test Method for In-Place Density and Water Content of Soil and Soil-Aggregate by Nuclear Methods (Shallow Depth).
   3. Federal Specifications (FS):
      a. TT-P-115F, Paint, Traffic (Highway, White and Yellow).
   4. Texas Department of Transportation (TxDOT):
      a. Standard Specifications for Construction of Highways, Streets and Bridges.
         1) Item 247 Flexible Base.
         2) Item 276 Cement Treatment (Plant-Mixed).
         3) Item 292 Asphalt Treatment (Plant-Mixed).
         4) Item 300 Asphalt, Oils, and Emulsions.
         5) Item 310 Prime Coat.
         6) Item 340 Dense-Graded Hot-Mix Asphalt.
      b. Test Procedures:
         1) TEX-120-E Soil-Cement Testing.
         2) TEX-204-F Design of Bituminous Mixtures.

B. Miscellaneous:
   1. Should conflicts arise between standard specifications of government agencies mentioned herein and Contract Documents, Contract Documents shall govern.

1.3 SUBMITTALS

A. Shop Drawings:
   1. Product technical data including:

a. Acknowledgement that products submitted meet requirements of standards referenced.
b. Manufacturer's installation instructions.

2. Asphaltic Concrete mix design.
   a. Test mix and provide results showing conformance to applicable specifications.

PART 2 - PRODUCTS

2.1 MATERIALS

A. Flexible Base:
   1. TxDOT Item 247, Type A, Grade 2.

B. Asphalt Treated Base:
   1. TxDOT Item 292, Grade 1.

C. Prime Coat: TxDOT Item 310.
   1. TxDOT Item 300, MC-30, AE-P, or EAP&T.

D. Tack Coat:
   1. TxDOT Item 300,
   2. Asphalt emulsion: SS-1H or CSS-1H.
   3. Performance Graded Binders.

E. Asphaltic Concrete:
   1. Base Course: TxDOT Item 340, Type B.
   2. Wearing (surface) Course: TxDOT Item 340, Type D.
   3. Asphalt: TxDOT Item 300, PG64-22.
   4. Max 20% Reclaimed Asphalt Pavement (RAP).

F. Pavement Marking Paint:
   1. Alkyd-resin type, ready mixed.
   2. Fed Spec TT-P-115F, Type 1, or AASHTO M-248, Type N.
   3. Color as indicated on the drawings.

G. Glass Beads:
   1. AASHTO M-247
   2. Include with line paint unless drawings specify non-reflective lines.

2.2 MIXES

A. Design asphaltic concrete in accordance with TxDOT Test Method TEX-204-F. Do not use more than 20% Reclaimed Asphalt Pavement in mix.

PART 3 - EXECUTION

3.1 INSTALLATION

A. Construct to line, grade and section as shown on Drawings and in accordance with referenced State Specifications.

B. Install Roadway Base material as indicated on the drawings.
   1. Compact Flexible base in accordance with TxDOT Item 247.3 to not less than 100% of the maximum dry density as determined by ASTM D1557 at moisture content within 2 percent of optimum.
   2. Install and compact Asphalt treated base in accordance with TxDOT Item 292 using density control.
   3. Compact Cement Treated Base to not less than 95% of the maximum dry density as determined by TxDOT Test Method Tex-120-E, Part II as required by TxDOT Item 276.

C. Spread a prime coat uniformly on compacted flexible base and on compacted cement treated base at rate of 0.08 to 0.10 GAL per square yard in accordance with TxDOT Item 310.

D. Clean all surfaces to tack coat and spread tack coat on all surfaces that require adherence to the asphalt base course and surface course, all concrete to come in contact with asphalt and at all pavement joints. Spread tack coat at a uniform rate of about 0.05 gallons per square yard.

E. Place Base Course at thickness indicated on the plans.
   1. Place base course with spreading and finishing machine in accordance with TxDOT Item 340. Use air void control for in place compaction control per Item 340. Provide testing indicated in TxDOT Item 340 by Engineer.

F. Place Surface Course at thickness indicated on the plans.
   1. Place surface course with spreading and finishing machine in accordance with TxDOT Item 340. Use air void control for in place compaction control per Item 340. Provide testing indicated in TxDOT Item 340 by Engineer.

3.2 INSTALLATION TOLERANCES

A. Thickness: Compact the base material and each pavement course to achieve the thickness specified within the following tolerances.
   1. Base Material: plus or minus 3/4 IN.
   2. Base Course of Asphaltic Concrete: plus or minus 1/2 IN.
   3. Surface Course: plus or minus 1/4 IN.

B. Surface Smoothness: Compact the base material and each pavement course to produce a surface smoothness within the following tolerances as determined by using a 10-foot straightedge applied transversely or longitudinally to paved areas.
   1. Base Material: plus or minus 1/2 IN.
   2. Base Course: plus or minus 1/4 IN.
   3. Surface Course: plus or minus 1/8 IN.
   4. Crowned Surface: plus or minus 1/4 IN when measured with a crown template set centered and at a right angle to the crown.

3.3 PAVEMENT MARKING

A. Thoroughly clean surfaces which are to receive paint.

B. Dry surface completely before applying paint.

C. Do not paint until minimum of 5 days has elapsed from time surface is completed. A longer period may be required if directed by Engineer.

D. Do not apply paint over wet surfaces, during wet or damp weather, or when temperature is below 40 DegF.

E. Lay out markings and striping in accordance with Drawings.
   1. Width of painted lines: 4 IN.

F. Apply paint with mechanical equipment to produce pavement markings of dimensions indicated with uniform, straight edges. Apply at manufacturer's recommended rates to provide a minimum wet film thickness of 15 mils.

G. Unless non-reflective striping is specified, broadcast glass spheres uniformly into wet pavement markings at a rate of 6 lb/gal.

3.4 FIELD QUALITY CONTROL

A. General:
   1. All testing must be performed under observation by the City of Boerne.
   2. Provide all testing that are referred to in TxDOT items as being performed by Engineer.

B. Test compaction density and moisture content of Flexible Base and Cement Treated Base in place according to ASTM D1556, ASTM D2167, ASTM D2937, and ASTM D6938 as applicable.
   1. Testing Interval: one test per 1,000 SY per lift of base in place.
   2. Remove and replace base materials where test results indicate that it does not comply with specified requirements.

C. In-Place Asphalt paving mixture Testing:
   1. Interval: One test per 1,000 SY minimum per lift installed and compacted.
   2. Thickness: In-place compacted thickness of hot-mix asphalt courses will be determined according to ASTM D3549
   3. Test asphalt paving mixtures in place in accordance with TxDOT Item 340.5.
   4. Surface Smoothness: Finished surface of each hot-mix asphalt course will be tested for compliance with smoothness tolerances
   5. Remove and replace or install additional hot-mix asphalt where test results or measurements indicate that it does not comply with specified requirements.

END OF SECTION

SECTION 02514
SIGNS

PART 1 - GENERAL

1.1 SUMMARY

A. Section Includes:
   1. Street signs.
   2. Traffic signs.
   3. No parking signs.
   4. Posts for signs.
   5. Footings for sign posts.

B. Related Sections include but are not necessarily limited to:
   1. Division 0 - Bidding Requirements, Contract Forms, and Conditions of the Contract.
   2. Division 1 - General Requirements.
   3. Section 03002 – Concrete

1.2 QUALITY ASSURANCE

A. Referenced Standards:
   1. ASTM International (ASTM):
      a. A53 Standard Specification for Pipe, Steel, Black and Hot-Dipped, Zinc-Coated, Welded and Seamless.
      b. A320 Standard Specification for Alloy-Steel and Stainless Steel Bolting for Low-Temperature Service.
      c. A865 Standard Specification for Threaded Couplings, Steel, Black or Zinc-Coated (Galvanized) Welded or Seamless, for Use in Steel Pipe Joints.
      d. B26 Standard Specification for Aluminum-Alloy Sand Castings.
      e. B85 Standard Specification for Aluminum-Alloy Die Castings.
      f. B108 Standard Specification for Aluminum-Alloy Permanent Mold Castings.
      g. B209 Standard Specification for Aluminum and Aluminum-Alloy Sheet and Plate.
      h. B449 Standard Specification for Chromates on Aluminum.
   2. Texas Department of Transportation (TxDOT):
      a. DMS: Departmental Material Specifications
         1) DMS 8300 Sign Face Materials.
      b. MPL: Material Producer List
         1) Sign Face Materials
      c. SHSD: Standard Highway Sign Designs for Texas.
      d. TMUTCD: Texas Manual on Uniform Traffic Control Devices.

B. Miscellaneous:
   1. Should conflicts arise between standard specifications of government agencies mentioned herein and Contract Documents, Contract Documents shall govern.

1.3 SUBMITTALS

A. Shop Drawings:
   1. Product technical data including:
      a. Acknowledgement that products submitted meet requirements of standards referenced.
      b. Manufacturer's installation instructions.

PART 2 - PRODUCTS

2.1 MATERIALS

A. Substrate
   1. Aluminum, ASTM B209, alloy 5052-H38 or 6061-T-6.
   2. Flat and made from sheet or coil, free of buckles, warps, dents, cockles, burrs and other defects.
   3. Chromate treated per ASTM B449, Class 2.

B. Sign Face Materials
   1. TxDOT DMS-8300
   2. Approved Manufacturers: listed on the TxDOT MPL for Sign Face Materials.

C. Hardware
   1. Aluminum Castings.
      a. Pipe Clamps:
         1) ASTM B 26, Alloy 356.0-F
         2) ASTM B 85, Alloy 360.0 or A360.0 or
         3) ASTM B 108, Alloy 356.0-F or A444.0-T-4
      b. Post Clamps:
         1) ASTM B 26, Alloy 356.0-T6, or
         2) ASTM B 108, Alloy 356.0-T6
   2. Screws, Bolts, Nuts, and Washers.
      a. Stainless Steel—ASTM A 320, Grade B8F Annealed

D. Posts:
   1. ASTM A53, Grade A
   2. Schedule 40, galvanized.
   3. Threaded as needed.

E. Couplings:
   1. ASTM A865.
   2. For Schedule 40 pipe, galvanized.
   3. Threaded.

F. Concrete: General use concrete per Section 03002.

2.2 DESIGN

A. All signs must conform to the size and shape requirements of the TMUTCD.

B. Provide signs in accordance with the Boerne Standard Details and project details.
   1. When details are not provided, provide signs that conform to the TxDOT SHSD.

PART 3 - EXECUTION

3.1 INSTALLATION

A. Mark locations of signs prior to installation for Utility locators and for the City of Boerne Inspector.
   1. Set center of footing such that the roadside edge of the sign will be 2 FT from the face of curb.

B. After locates have cleared, excavate for the pole footing and construct in accordance with the Standard Details.
   1. Set footing pipe plumb in concrete.
   2. Thread post into coupling on footing and plumb post before concrete sets. Brace footing to ensure that sign and post will be plumb in all directions when complete.

C. When concrete footing has cured:
   1. Install post of sufficient length to set the bottom of the sign a minimum of 7 FT above finished grade.
   2. Install sign to post with appropriate fittings and hardware.
   3. Install aluminum top cap on all open top sign posts.
   4. Thread post into coupling on footing.
   5. Adjust sign to face in the direction of traffic and tighten hardware.
   6. Ensure that street signs indicate the appropriate street names.

END OF SECTION

SECTION 02530
SANITARY SEWER SYSTEM

PART 1 - GENERAL

1.1 SUMMARY

A. Section includes sanitary sewer system piping for collection of wastewater.

B. Related Sections include but are not limited to:
1. Division 0 - Bidding Requirements, Contract Forms, and Conditions of the Contract.
2. Division 1 - General Requirements.
3. Section 02110 - Site Clearing.
4. Section 02221 - Trenching, Backfilling, and Compacting for Utilities.
5. Section 02224 - Pipeline Undercrossings.
6. Section 02260 - Topsoiling and Finished Grading.
7. Section 03002 - Concrete.
8. Section 09905 – Paint and Protective Coatings.

1.2 QUALITY ASSURANCE

A. Referenced standards:
1. American Society for Testing and Materials (ASTM):
   a. A48, Standard Specification for Gray Iron Castings.
   b. A53, Standard Specification for Pipe, Steel, Black and Hot-Dipped, Zinc-Coated, Welded and Seamless.
   c. A240, Standard Specification for Chromium and Chromium-Nickel Stainless Steel Plate, Sheet, and Strip for Pressure Vessels and for General Applications
   d. C443, Standard Specification for Joints for Concrete Pipe and Manholes, Using Rubber Gaskets
   e. C478, Standard Specification for Precast Reinforced Concrete Manhole Sections.
   f. C564, Standard Specification for Rubber Gaskets for Cast Iron Soil Pipe and Fittings.
   g. C891, Standard Practice for Installation of Underground Precast Concrete Utility Structures.
   h. C923, Standard Specification for Resilient Connectors Between Reinforced Concrete Manhole Structures, Pipes, and Laterals.C1244, Standard Test Method for Concrete Sewer Manholes by the Negative Air Pressure (Vacuum) Test Prior to Backfill
   i. C1173, Standard Specification for Flexible Transition Couplings for Underground Piping Systems.
   j. C1244, Standard Test Method for Concrete Sewer Manholes by the Negative Air Pressure (Vacuum) Test Prior to Backfill.
   k. D1248, Standard Specification for Polyethylene Plastics Extrusion Materials For Wire and Cable.
   l. D2321, Standard Practice for Underground Installation of Thermoplastic Pipe for Sewers and Other Gravity-Flow Applications.
   m. D2564, Standard Specification for Solvent Cements for Poly(Vinyl Chloride) (PVC) Plastic Piping Systems.
   n. D2855, Standard Practice for Making Solvent-Cemented Joints with Poly(Vinyl Chloride) (PVC) Pipe and Fittings.
   o. D3034, Standard Specification for Type PSM Poly(Vinyl Chloride) (PVC) Sewer Pipe and Fittings.
   p. F477, Standard Specification for Elastomeric Seals (Gaskets) for Joining Plastic Pipe.
   q. F593, Standard Specification for Stainless Steel Bolts, Hex Cap Screws, and Studs.

r. F594, Standard Specification for Stainless Steel Nuts.
s. F679, Standard Specification for Poly(Vinyl Chloride) (PVC) Large-Diameter Plastic Gravity Sewer Pipe and Fittings.
t. F1417, Standard Test Method for Installation Acceptance of Plastic Gravity Sewer Lines Using Low-Pressure Air.

2. American Water Work Association (AWWA):
   a. C105, Standard for Polyethylene Encasement for Ductile-Iron Pipe Systems.
   b. C110, Standard for Ductile-Iron and Gray-Iron Fittings, 3 IN. through 48 IN. (76 mm through 1,219 mm), for Water.
   c. C111, Standard for Rubber-Gasket Joints for Ductile-Iron Pressure Pipe and Fittings.
   d. C151, Standard for Ductile-Iron Pipe, Centrifugally Cast, for Water.
   e. C219, Standard for Bolted, Sleeve Type Couplings for Plain End Pipe.
   f. C600, Standard for Installation of Ductile-Iron Water Mains and Their Appurtenances.
   g. C605, Standard for Underground Installation of Polyvinyl Chloride (PVC) Pressure Pipe and Fittings for Water.
   h. C900, Standard for Polyvinyl Chloride (PVC) Pressure Pipe and Fabricated Fittings, 4 IN through 12 IN (100mm through 300mm), for Water Distribution.
3. Texas Commission on Environmental Quality (TCEQ): Texas State Agency that regulates wastewater collection and treatment. Regulations are codified in Chapter 30 of the Texas Administrative Code (30 TAC).

1.3 SUBMITTALS

A. Shop Drawings:
   1. See Section 01340.
   2. Product technical data including:
      a. Acknowledgement that products submitted meet requirements of standards referenced.
   3. Cut sheets for sewerage piping and force main piping. Cut sheets must show existing ground or pavement elevations measured at pipe centerline, pipe invert elevation and depth from existing ground or pavement to pipe invert at a minimum of 50 foot intervals and at major changes in grade of existing ground or pavement and at the center of manholes. Cut sheets shall show the length of sewerage piping within the various depth categories provided for in the unit price schedule and bid proposal.

B. Field Test Reports: Indicate and interpret test results for compliance with performance requirements.

PART 2 - PRODUCTS

2.1 PIPE

A. Polyvinyl Chloride (PVC) Pressure Pipe for Buried Service: AWWA C900, Class 150, for gasketed joints, white in color.
   1. Ductile-Iron Fittings: AWWA C110, push on joints or mechanical joints.
   2. Gaskets for Ductile-Iron Fittings: AWWA C111, rubber.

B. Ductile Iron (DI) Pressure Pipe for Force Main: AWWA C151, Class 150 minimum for joints as indicated.
   1. Standard pattern ductile iron fittings: AWWA C110 for mechanical joints underground and flanged joints above ground.
   2. Interior Lining: Provide one of the following with a minimum thickness, 40 mils.
      a. Polyethylene, “Polybond” by American Pipe.
      b. Polyurethane, “Polythane” by U.S. Pipe.
   3. Gaskets: AWWA C111, Rubber.

C. Polyethylene (PE) Pipe for Force Main:
   1. AWWA C906, PE4710, DIPS.

2. Dimension ratio:
   a. DR 17 for up to 100 PSI maximum working pressure.
   b. DR 11 for up to 160 PSI maximum working pressure.
3. Joints.
   a. Butt fused.
   b. Electrofusion couplings.
   c. Mechanical (stuffing box type) at valves and transitions to other pipe materials.
4. Exterior color: black with green stripes or green.
5. Interior color: white or light grey to provide light reflectance suitable for imaging.
6. Fittings: Polyethylene, AWWA C906.

D. Polyvinyl Chloride (PVC) Sewer Pipe and Fittings: 15 IN and Smaller:
   1. ASTM D3034, for gasketed joints.
   2. SDR 35 for pipe up to 14-feet deep.
   3. SDR 26 for pipe greater than 14-feet deep.
   4. Gaskets: ASTM F477, elastomeric seals.

E. Polyvinyl Chloride (PVC) Pressure Pipe for Gravity Sewer: 12 IN and Smaller:
   1. ASTM D2241, for gasketed joints.
   2. SDR 21 or 26, Min. Class 160.
   3. Gaskets: ASTM F477, elastomeric seals.
   4. Fittings: 160 PSI pressure rating per ASTM D2241.

F. Polyvinyl Chloride (PVC) Sewer Pipe and Fittings: 18 IN and larger.
   1. ASTM F679, for gasketed joints.
   2. Maximum bury depth based on 5% max. deflection and Pipe Stiffness of 46 psi.
   3. Gaskets: ASTM F477, elastomeric seals.

G. Polyvinyl Chloride (PVC) Sewer Pipe and Fittings: 6 IN and smaller for services:
   1. ASTM D3034 for solvent weld joints.
   2. SDR 35 for pipe up to 14-feet deep.
   3. SDR 26 for pipe greater than 14-feet deep.
   4. Solvent cement and primer: ASTM D2564.

2.2 SPECIAL PIPE COUPLINGS AND FITTINGS

A. Non-pressure rated Sleeve-Type Pipe Couplings: ASTM C1173, Shielded rubber or elastomeric bushing and clamp bands fabricated to mate with the OD of pipes to be joined.
   1. Bushings: Molded to coupling, ASTM C1173
   2. Shield: 300 Series Stainless Steel, 0.012” minimum thickness.
   3. Bands: 316 Stainless steel:
      a. Pipe < 6 IN DIA: at least one at each pipe insert.
      b. Pipe 6 IN DIA and greater: at least two at each pipe insert.

B. Pressure-Type Couplings: AWWA C219, iron-body sleeve assembly matching OD of pipes to be joined:
   1. Rubber Gaskets: AWWA C111.
   2. Hardware: Stainless steel bolts and nuts per AWWA C111.
   3. Include PE film pipe encasement.

2.3 PE FILM, PIPE ENCASEMENT

A. AWWA C105; PE film, tube, or sheet; 8-mil (0.2-mm) thickness.

2.4 CONCRETE

A. Ballast, Pipe Supports, and Encasement: Concrete Fill, per Section 03002.

2.5 CLEANOUTS

A. Point of Service Cleanouts on service laterals:

1. Fit service lateral with 6 IN wye fitting to match pipe type, turn branch to 12:00 position.
2. Cleanout Riser: Install 45º Bend and 6 IN pipe to a minimum of 12 IN above ground surface for completion after service connection is made to structure.
   a. Terminate with a solvent welded cap.
   b. Final completion can be terminated with a solvent welded cleanout cap with integral threaded plug.
   c. If terminated at or below finished grade, protect with cleanout boot.
3. Install 6 IN pipe in end of wye fitting to a point a minimum of 3 FT beyond the wye such that the end of the pipe is below the end of the cleanout riser.. Install a rubber gasket joint cap or a solvent weld cap.

B. End of main cleanout:
1. End main with long sweep 1/8 bend fitting to match pipe type. Turn end to 12:00 position.
2. Install main size X 6 IN reducer on riser from Bend. Install 6 IN riser to top of cleanout.
3. Terminate cleanout with solvent welded cleanout cap with integral threaded plug.
4. Protect cleanout cap with cleanout boot.

C. Cleanout boot:
1. Cast iron or Ductile iron rated for HS-20 traffic loading.
2. Provide angled boot cleanout risers at 45º angle.
   a. Bottom opening: 22 IN wide.
   b. Top opening: 6 IN diameter minimum.
   c. Height: 10 IN minimum.
3. Provide vertical boot for vertical cleanout risers.
   a. Bottom opening: 12 IN diameter minimum.
   b. Top opening: 11 IN diameter minimum.
   c. Height: 5 IN minimum.
4. Lids
   a. Cast Iron or Ductile iron.
   b. HS-20 traffic rated.
   c. Secured with locking ears, bolts or sufficient weight and depth to hold in place.

2.6 WARNING TAPE

A. Underground warning tape:
1. Material: Polyethylene with metallic core, traceable type.
2. Thickness: 3.5 mils.
3. Tensile strength: 1750 psi.
4. Size: 6 IN wide (minimum).
5. Legend: Preprinted continuously.
   a. “CAUTION – SANITARY SEWER BURIED BELOW”, or
   b. “CAUTION – FORCE MAIN BURIED BELOW”.
   c. Black lettering on green background.

B. Tracer Wire
1. Insulation rated for 600V.
2. 12 AWG solid copper conductor.
3. UL 83 for THHN/THWN and THHN/THWN-2 insulation.
4. UL listed for direct burial.
5. Jacket:
   a. Green.
   b. Nylon.
   c. Heat, oil and gasoline resistant.
6. Split bolt connector for splice:
   a. Bolt and nut: Bronze alloy.
   b. Copper pressure bar.
   c. Size for 2, 12 AWG solid copper conductors.
   d. Insulate with a minimum of 2 layers of plastic electrical tape.

C. Tracer Wire Locate Boxes
   1. Rim and lid:
      a. Cast iron or ductile iron.
      b. Standard pentagon head lock bolt.
      c. Nickel plated brass terminal(s) for tracer wire connection.
      d. Lettering on top of cover: “SEWER LOCATE”
      e. Top color: Green.
   2. Body:
      a. 2 1/2 IN DIA ABS plastic tube.
      b. Length to fit to depth of tracer wire.
      c. Magnet embedded in tube wall.

2.7 PRECAST CONCRETE MANHOLES

A. Manhole Components:
   1. Precast concrete: ASTM C478.
   2. Minimum wall thickness: 5 IN.
   3. Minimum base thickness: 12 IN.
   4. Provide the following components for each manhole structure:
      a. Base (precast) with integral bottom section.
         1) Include flow channels from inlet to outlet.
         2) Bench shall have a minimum slope of 1 IN per FT.
      b. Precast barrel section(s).
      c. Precast adjuster ring(s).
      d. Precast concrete transition section or precast flat top.
   5. Joints: Resilient O-ring gaskets manufactured from natural or synthetic materials complying with ASTM C443.
   6. Unless dimensioned or specifically noted on Drawings, provide manhole section with minimum 48 IN inside dimensions.

B. Standard Frame and Cover:
   1. Gray Iron frame and cover: ASTM A48, Class 30 B.
   2. Frame weight: 220 lbs ±5 lbs.
   3. Lid weight: 200 lbs. ±5 lbs.
   4. Design: HS20 Loading minimum..
   5. Machine all horizontal mating surfaces.
   6. Furnish unit with solid non-ventilated lid with non-penetrating holes or slots for removal of cover.
   7. Letter covers: "SANITARY SEWER".
   8. Opening:
      a. Circular
      b. Standard: 24 IN Diameter, clear.
      c. Designed for personnel access: 30 IN Diameter, clear.

C. Pressure Tight Frame and Cover:
   1. Gray Iron frame and cover: ASTM A48, Class 30 B.
   2. Frame weight: 220 lbs ±5 lbs.
   3. Lid weight: 200 lbs ±5 lbs.
   4. Design: HS20 Loading minimum.
   5. Machine all horizontal mating surfaces.
   6. Furnish unit with solid non-ventilated lid with non-penetrating holes or slots for removal of cover.
   7. Letter covers: "SANITARY SEWER".
   8. Opening:
      a. Circular
      b. Standard: 24 IN Diameter, clear.
      c. Designed for personnel access: 30 IN Diameter, clear.
   9. Secure lid to frame with:

a. Stainless steel bolts.
b. 5/8 IN DIA by 1-3/4 IN long.
c. ASTM F593, Type 316 or 316L.

10. Provide solid lid and minimum 5/16 IN DIA neoprene O-ring gasket set in a 1/4 IN deep groove.
11. Designed for 14 PSI pressure or vacuum.
12. Furnish frame with a minimum of four anchorage holes and four 3/4 IN DIA stainless steel anchor bolts of sufficient length to secure frame to manhole cone section with a minimum embedment of 6 5/8 IN.
    a. Include epoxy capsule for anchor.
    b. Hilti HVU or equal.

D. Special Coatings:
1. Coat the interior and exterior of all manholes:
2. Exterior manhole surfaces: Coal tar epoxy, System 8 per Section 09905.
3. Interior manhole surfaces: Epoxy modified mortar filler with a fiber reinforced modified polyamine epoxy topcoat, System 18 per Section 09905.

E. Sanitary Sewer Manhole Concrete:
1. Provide all sanitary manholes constructed with Portland ASTM C150, Type II cement with a tricalcium aluminate content not to exceed 8 percent.
2. Mix aggregate shall be a minimum of 50 percent crushed limestone.
3. Provide 3000 psi non-shrink grout.

F. Pipe Connectors: ASTM C923.
1. For connecting pipes to holes cored in existing manholes use approved Link Seal connectors manufactured by Thunderline Link-Seal, or approved equal.

G. Manhole Vents:
1. Standard weight (schedule 40) galvanized-steel pipe: ASTM A53,
    a. actual outside diameter of 2.375 inches,
    b. weight of 3.65 lb./ft.
2. Provide tee connection at post as indicated and screened gooseneck top on post.
    a. Screen: aluminum insect screen secured with corrosion resistant clamps.
    b. Set screened opening a minimum of six inches above the 100 year flood elevation.
3. Set post in 3,000 psi concrete away from traffic and pedestrian areas and adjacent to a fence if possible.

H. Grade adjustment rings
1. Reinforced concrete grade adjustment rings: ASTM C478.
2. Free from cracks, voids, and other defects.
3. Inside diameter: to match manhole frame and cover.
4. Seal between rings and between rings and manhole section with pre-molded butyl rubber sealant.
5. Use at least two grade adjustment rings for a minimum of 4 IN and no more than 4 rings for a maximum of 12 IN.

I. Chimney Seals:
1. External rubber seal:
    a. Rubber sleeve and extension:
        1) Corrugated rubber: ASTM C923.
        2) Minimum thickness: 3/16 IN.
    b. Compression Bands:
        1) One piece band assembly to compress sleeve or extension against manhole and casting surfaces.
        2) Stainless steel: 16 GA. ASTM A240 Type 304, minimum 1 IN width and length to provide a minimum of 4 IN of adjustment greater than manhole chimney diameter.
        3) Top band shaped to lock sleeve to manhole frame base flange.
        4) Fasteners: Stainless Steel, ASTM F593 and F594, Type 304.

2. Internal rubber seal:
   a. Double pleated rubber: ASTM C923.
   b. Minimum thickness: 3/16 IN.
   c. Minimum vertical expansion: 2 IN.
3. Expansion bands:
   a. One-piece band assembly to compress sleeve or extension against manhole and casting surfaces.
   b. Stainless steel: 16 GA. ASTM A240 Type 304, minimum 1 3/4 IN width and length to provide a minimum of 2 IN of adjustment greater than the manhole chimney inside diameter.
   c. Fasteners: Stainless Steel, ASTM F593 and F594, Type 304.

J. Vented Manhole Cover and insert
1. Insert to prevent inflow into manhole through cover with a spring-loaded vent to allow for gas escape and vacuum release.
2. Insert material:
   a. High density polyethylene, ASTM D1248 Class A, minimum 1/8 Inch thick.
   b. Stainless Steel, 18 gauge, Type 304.
3. Gasket: closed cell neoprene.
4. Provide lift strap to remove insert.
5. Design insert to support 2,200 LBS applied to a 5 inch square area in the center of the insert.
6. Vent: spring-loaded to open at 2 psi vacuum and 1 psi pressure. Locate 3/4 IN below lid.
7. Manhole cover:
   a. Standard cover as specified above.
   b. With a 1/2 IN DIA hole in the center with 1/8 IN high raised walls.

PART 3 - EXECUTION

3.1 PREPARATION

A. Obtain approval of cutsheets from Engineer prior to beginning excavation.

B. Excavate trenches in accordance with requirements in Section 02221.

3.2 IDENTIFICATION

A. Install warning tapes directly over piping and at outside edges of underground structures
1. Unpaved areas: 12 IN below finished grade.
2. Paved areas: 6 IN below subgrade.

3.3 INSTALLATION

A. General Locations and Arrangements: Drawing plans and details indicate general location and arrangement of underground sanitary sewerage piping. Location and arrangement of piping layout take design considerations into account. Install piping as indicated. Notify Engineer prior to making any modifications to line, grade, or elevation of system.

B. Install piping beginning at low point, true to grades and alignment indicated with unbroken continuity of invert. Place bell ends of piping facing upstream. Install gaskets, seals, sleeves, and couplings according to manufacturer's written instructions for using lubricants, cements, and other installation requirements. Maintain swab or drag in line, and pull past each joint as it is completed.

C. Use manholes for changes in direction, unless fittings are indicated. Use fittings for branch connections, unless direct tap into existing sewer is indicated.

D. Use proper size increasers, reducers, and couplings where different sizes or materials of pipes and fittings are connected. Reducing size of piping in direction of flow is prohibited.

E. Install gravity-flow piping at constant slope between manholes. Terminate piping as indicated.

1. Install piping pitched down in direction of flow, at minimum slope of 2 percent, unless otherwise indicated.
2. Install piping with 48-inch minimum cover.
3. Maintain same pipe wall thickness (SDR #) between manholes unless otherwise indicated on drawings.

F. Install force-main piping between and connect to sewage lift station outlet and termination point indicated.
1. Install piping with restrained joints at horizontal and vertical changes in direction. Use cast-in-place concrete supports and anchors or corrosion-resistant rods and clamps, or pre-approved thrust restraints.
2. Install piping with 48-inch minimum cover.

G. Install ductile-iron, force-main piping according to AWWA C600.

H. Install PVC force-main piping according to AWWA C605.

I. Install PVC sewer pipe in accordance with ASTM D2321.

J. Tunneling: Install pipe under streets or other obstructions that cannot be disturbed by tunneling, jacking, or a combination of both.

3.4 MANHOLE CONSTRUCTION

A. Build each manhole to dimensions shown on plans and at such elevation that pipe sections built into wall of manhole will be true extensions of line of pipe.

B. Install precast concrete manhole sections with gaskets according to ASTM C891.

C. Apply Special Coatings to the exterior of the installed manhole prior to placement of backfill.

D. Seal mating surfaces of concrete and concrete and metal:
1. Trowel apply to clean surface black mastic joint compound to a minimum wet thickness of 1/4 IN immediately prior to mating the surfaces.
2. Apply pre-molded butyl rubber sealant to both surfaces.

E. Install manhole sections with pre-molded butyl rubber sealant in addition to resilient O-ring type gasket Use approved gasket lubricant on precast manhole section O-rings.

F. Place grade adjustment rings on top of top cone section of manhole to set frame and cover at final grade. If other work will be completed before setting rings and frame and cover, provide temporary cover over manhole opening to prevent depositing debris in manhole and provide a safe work environment.

G. Anchor manhole frame and cover on Pressure Tight Manholes with stainless steel epoxy anchor bolts.

H. Install chimney seal on exterior of chimney on new manholes and on interior of chimney on existing manholes that are adjusted or rehabilitated during construction.

I. Install Manhole Vents on manholes as indicated on drawings.

J. Seal all pipe penetrations in manhole with resilient pipe connectors. Grout remaining space around pipe, between pipe and manhole wall, flush with the manhole wall and the formed manhole invert channels to form a smooth flow path between the pipe and the manhole.

K. Set tops of frames and covers flush with finished surface of manholes that occur in pavements. Set tops 1-3 inches above finished surface elsewhere, unless otherwise indicated.

L. Finish manhole interior with application of Special Coatings after the manhole has passed all required tests.

3.5 PIPE JOINT CONSTRUCTION AND INSTALLATION

A. General: Join and install pipe and fittings according to installations indicated.

B. Ductile-Iron Pressure Pipe with Ductile-Iron Fittings: According to AWWA C600.
   1. Install PE film, pipe encasement over ductile-iron sewer pipe and ductile-iron fittings according to AWWA C105.

C. PVC Force Main Pressure Pipe and Fittings: Join and install according to AWWA C605.
   1. Install PE film, pipe encasement over ductile iron fittings according to AWWA C105.
   2. Install tracer wire one inch above pipe, or secure to top of pipe with tape.
   3. Tracer wire locate boxes:
      a. Install at locations indicated on plans or at intervals of not more than 500 FT.
      b. Install top of box flush with pavement and 1 IN above grade in unpaved areas.
      c. Install concrete pad around top of box.
      d. Bring tracer wire up in box and provide sufficient length to bring wire ends to a minimum of 2 FT above final grade.
      e. Connect tracer wire to terminals on lid and coil slack in box.
      f. Install sign to mark box location as indicated on drawings.

D. PVC Sewer Pipe and Fittings: As follows:
   1. Join pipe and gasketed fittings with gaskets according to ASTM D2321.
   2. Install according to ASTM D2321.
   3. Join pipe for services and solvent-cement fittings according to ASTM D2855.

E. Join piping made of different materials or dimensions with couplings made for this application. Use couplings that are compatible with and that fit both systems' materials and dimensions.

F. Install with top surfaces of components, except piping, flush with finished surface.

3.6 SEWER INSTALLATION IN VICINITY OF WATER MAINS AND SERVICES

A. Comply with the requirements of 30 TAC 217.53(d).

B. The requirements of this article will apply whenever the sewer is installed within nine feet clear of a pipe or conduit carrying potable water.

C. Sewer Parallel to Water Main: Use PVC Pressure Pipe for sewer pipe located a minimum of two feet below the water main with a minimum four feet horizontal separation.

D. Sewer Crossing Water Main With Minimum Six Inch Clear Separation Distance: Use PVC Pressure Pipe for sewer pipe with one 18 foot or longer joint of pipe centered across water pipe. All sewer pipe within nine feet of the outside diameter of the water main must be Pressure Pipe including joints.

E. Manholes Closer Than Nine Feet Clear To Water Pipes: Case 18 feet of water pipe with PVC Pressure Pipe centered on manhole and at least two nominal pipe sizes larger than water pipe. Provide spacers or washed sand to support water main inside casing pipe. Plug ends of casing pipe with cement grout or a manufactured seal.

3.7 CLEANOUT INSTALLATION

A. Install cleanouts and riser extension from sewer pipe to cleanout at grade. Install piping so cleanouts open in direction of flow in sewer pipe.

B. Set cleanout frames and covers in earth in cast-in-place concrete block, 18 IN by 18 IN by 12 IN deep. Set with tops 1 IN above surrounding grade.

C. Set cleanout frames and covers in concrete pavement with tops flush with pavement surface.

3.8 TAP CONNECTIONS

A. Make connections to existing piping and underground structures so finished Work complies as nearly as practical with requirements specified for new Work.

B. Use commercially manufactured wye fittings for piping branch connections. Remove section of existing pipe; install wye fitting into existing piping; and encase entire wye fitting, plus 6 IN overlap, with not less than 6 IN of concrete.

C. Make branch connections from side into existing piping 6 IN through 20 IN. Remove section of existing pipe; install wye fitting into existing piping; and encase entire wye with not less than 6 IN of concrete.
   1. Option: Use approved Inserta-Tee type fitting as manufactured by Fowler Industries, or equal.

D. Make branch connections from side into existing piping, 21 IN or larger, or to underground structures by cutting opening into existing unit large enough to allow 3 IN of concrete to be packed around entering connection. Cut end of connection pipe passing through pipe or structure wall to conform to shape of and be flush with inside wall, unless otherwise indicated. On outside of pipe or structure wall, encase entering connection in 6 IN of concrete for minimum length of 12 IN to provide additional support of collar from connection to undisturbed ground.
   1. Use epoxy-bonding compound as interface between new and existing concrete and piping materials.

E. Protect existing piping and structures to prevent concrete or debris from entering while making tap connections. Remove debris or other extraneous material that may accumulate.

3.9 CLOSING ABANDONED SANITARY SEWERAGE SYSTEMS

A. Abandoned Piping: Close open ends of abandoned underground piping indicated to remain in place. Include closures strong enough to withstand hydrostatic and earth pressures that may result after ends of abandoned piping have been closed. Use either procedure below:
   1. Close open ends of piping with threaded metal caps, plastic plugs, or other acceptable methods suitable for size and type of material being closed. Do not use wood plugs.
   2. Pressure grout pipe where indicated.

B. Abandoned Structures: Excavate around structure as required and use one procedure below:
   1. Remove top of structure down to at least 36 inches (1000 mm) below final grade. Fill to within 12 inches (300 mm) of top with stone, rubble, gravel, or compacted dirt. Fill to top with concrete.
   2. Backfill to grade per Section 02221.

3.10 TOLERANCES

A. Manholes:
   1. Horizontal position: within ± 0.25 FT of plan northing and plan easting position measured at the center of the manhole base.
   2. Vertical position: within ± 0.08 FT of plan vertical elevation measured at the invert of the pipe out of the manhole.
   3. Plumb: Manhole shall be plumb vertically within ± 0.02 FT in 6 FT of depth measured at the center of the top and center of the base for concentric cone manholes and along the wall at the tallest point of eccentric cone manholes.

B. Sewer Pipe: Construct sewers to the lines and grades shown on the plans with the following tolerances:
   1. Horizontal Position: ± 0.20 feet.
   2. Horizontal Alignment: ± 0.10 feet in 20 linear feet, ± 0.20 feet total between manholes.
   3. Vertical Position: ± 0.08 feet.
   4. Vertical Alignment: ± 0.010 feet in 20 linear feet, ± 0.04 feet maximum between manholes.

C. As construction progresses, survey manholes and sewers to ensure construction within tolerances. Correct construction not within tolerance.

3.11 FIELD QUALITY CONTROL

A. All testing shall be performed under observation of the City of Boerne.

B. Clear interior of piping and structures of dirt and superfluous material as work progresses. Maintain swab or drag in piping, and pull past each joint as it is completed.
   1. Place plug in end of incomplete piping at end of day and when work stops.
   2. Flush piping between manholes and other structures to remove collected debris.

C. Inspect interior of piping to determine whether line displacement or other damage has occurred. Inspect after approximately 24 inches of backfill is in place, and again at completion of Project.
   1. Submit separate reports for each system inspection.
   2. Defects requiring correction include the following:
      a. Alignment: Less than full diameter of inside of pipe is visible between structures.
      b. Deflection: Flexible piping with deflection that prevents passage of ball or cylinder of size not less than 95 percent of piping diameter.
      c. Crushed, broken, cracked, or otherwise damaged piping.
      d. Infiltration: Water leakage into piping.
      e. Exfiltration: Water leakage from or around piping.
   3. Replace defective piping using new materials, and repeat inspections until defects are within allowances specified.
   4. Reinspect and repeat procedure until results are satisfactory.

D. Manholes: Perform vacuum test according to ASTM C1244 and 30 TAC §217.58(b)(2).
   1. Seal all lift holes and other openings in manhole.
   2. Test manhole before grouting horizontal joints.
   3. Temporarily plug all pipes entering the manhole.
   4. Place testing machine on top of manhole in accordance with manufacturer's instructions.
   5. Secure testing machine with torque wrench per manufacturer's instructions.
   6. Draw a vacuum of 10 IN of mercury on the manhole.
   7. Turn vacuum pump off and measure the time it takes for the vacuum to drop from 10 IN of mercury to 9 IN of mercury.
   8. If more than two minutes passes and the vacuum is at least 9 IN of mercury, the manhole passes.

E. Test new piping systems, and parts of existing systems that have been altered, extended, or repaired, for leaks and defects.
   1. Do not enclose, cover, or put into service before inspection and approval.
   2. Test completed piping systems according to authorities having jurisdiction.
   3. Schedule tests and inspections by the City of Boerne with at least 24 hours' advance notice.
   4. Submit separate reports for each test.
   5. Sanitary Sewerage: Perform test a, test b, and test c as follows:
      a. Air test: ASTM F1417 and 30 TAC 217.57(a)(1)
         1) See line testing table at end of this section for minimum test times.
      b. Deflection Test: 30 TAC 217.57(b)
         1) Perform test after backfill has been in place for a minimum of 30 days.
         2) Use mandrel as indicated.
         3) Pull mandrel by hand through pipe.
         4) If mandrel does not come through, excavate pipe and correct defect. Retest as necessary after backfill has been in place a minimum of 30 days.
      c. Video inspection:
         1) Clean main and services clear of debris before beginning inspection, see Section 02531.
         2) Flush segment being inspected with water immediately prior to inspection.
         3) Video inspect mains per Section 02532.
         4) Clean and video inspect sewer service laterals from cleanout wye to main.
         5) Passing test will show no defects in pipe construction and no sags in pipe alignment.
         6) Sag Test: If a sag in the line is suspected, conduct a sag test by pushing a USPGA standard golf ball in front of the camera.

a) Provide a depth of flow downstream of suspected sag equal to half the diameter of the golf ball.
b) Push the golf ball into the area of the suspected sag.
c) If the golf ball is submerged, the sag is unacceptable.

7) Debris identified during video inspection must be removed and the inspection repeated.
8) Defects found in the video inspection must be corrected and the main and/or lateral retested and inspected. Sags not passing the sag test must be reconstructed to true line and grade.

6. Force Main: Perform hydrostatic test after thrust blocks, supports, and anchors have hardened. Test at pressure not less than one and one-half times maximum system operating pressure, but not less than 50 psig (1035 kPa).
   a. Ductile-Iron Piping: Test according to AWWA C600, Section "Hydrostatic Testing."
   b. PVC Piping: Test according to AWWA C605, Section “Hydrostatic Testing”.
   c. Test tracer wire by hooking up at locate boxes with locator and verifying that strong locate signal can be followed for the full length of the pipeline. Repair tracer wire if locator fails to trace pipe in any area. Add tracer wire locate boxes if necessary to ensure strong signal for full length of pipe.
7. Leaks and loss in test pressure constitute defects that must be repaired.
8. Replace leaking piping using new materials, and repeat testing until leakage is within allowances specified.

3.12 LINE TESTING TABLES

A. The time for air testing shall not be less than the following:

Pipe Size (IN)	Minimum Time (sec)	Length for Minimum Time (FT)	Time for Longer Length (sec)
6	340	398	0.855(L)
8	454	298	1.520(L)
10	567	239	2.374(L)
12	680	199	3.419(L)
15	850	159	5.342(L)
18	1020	133	7.693(L)
21	1190	114	10.471(L)
24	1360	100	13.676(L)
27	1530	88	17.309(L)
30	1700	80	21.369(L)

L is the actual length of pipe being tested for lengths longer than the minimum. For pipe sizes not shown refer to 30 TAC 217.

B. The leakage per 1,000 feet of Ductile Iron pipe in gallons per hour shall not exceed:

	Nominal Pipe Diameter (IN)							
Avg. Test Pressure (psi)	3	4	6	8	10	12	14	16
150	0.23	0.31	0.47	0.63	0.79	0.95	1.10	1.26
125	0.23	0.31	0.47	0.63	0.79	0.95	1.10	1.26
100	0.23	0.30	0.45	0.60	0.75	0.90	1.05	1.20
75	0.20	0.26	0.39	0.52	0.65	0.78	0.91	1.04
50	0.16	0.21	0.32	0.42	0.53	0.64	0.74	0.85

Leakage allowances for other pipe sizes and test pressures shall be in accordance with AWWA C600, but in no case can leakage exceed 10 gallons per inch diameter per mile per day.

C. The leakage per 50 joints of AWWA C900 PVC pipe in gallons per hour shall not exceed:

	Nominal Pipe Diameter (IN)						
Avg.Test Pressure (psi)	4	6	8	10	12	14	16
150	0.31	0.47	0.63	0.79	0.95	1.10	1.26
125	0.30	0.45	0.60	0.76	0.91	1.06	1.21
100	0.27	0.41	0.54	0.68	0.81	0.95	1.08
75	0.23	0.35	0.47	0.59	0.70	0.82	0.94
50	0.19	0.29	0.38	0.48	0.57	0.67	0.76

Leakage allowances for other pipe sizes and test pressures shall be in accordance with AWWA C605, but in no case can leakage exceed 10 gallons per in diameter per mile per day.

3.13 CLEANING

A. After testing of sewers and manholes but prior to substantial completion, clean pipes and manholes of gravel, silt, mud, loose concrete and debris.
   1. Clean in accordance with Section 02531.
   2. Clean manhole frames and covers of debris, asphalt, grit and soil. Clean pick slots in manhole covers.

B. Prior to final completion, sweep tops of manhole covers and ring encasements (where exposed) to prevent entry of soil and dirt into the sewer.
   1. Inspect manhole covers and ensure that all manhole cover bolts are installed correctly.

END OF SECTION

SECTION 02531
CLEANING SANITARY SEWERS

PART 1 - GENERAL

1.1 SUMMARY

A. Section includes cleaning of existing and newly constructed sanitary sewers.

B. Related Sections include but are not limited to:
   1. Division 0 - Bidding Requirements, Contract Forms, and Conditions of the Contract.
   2. Division 1 - General Requirements.
   3. Section 02530 – Sanitary Sewer Systems.

1.2 SUBMITTALS

A. Shop Drawings:
   1. See Section 01340.
   2. Product technical data including:
      a. Acknowledgement that products submitted meet requirements of standards referenced.
   3. Equipment manufacturer's operating manual and guidelines.

PART 2 - PRODUCTS

2.1 NOT USED.

PART 3 - EXECUTION

3.1 PREPARATION

A. Visually inspect manholes and sewers to determine the needed materials and equipment.

B. Ensure that all required equipment is available onsite and in good operating condition.

C. Have equipment ready to haul any waste material or debris cleaned from the sewer.

D. Apply for bulk water for cleaning operations from the City of Boerne Public Works department.
   1. City will set meter on convenient fire hydrant. If meter needs to moved during project, contact City of Boerne Public Works Department and they will have meter moved.
   2. Provide backflow prevention for equipment connected to fire hydrant.
   3. Do not damage private property. Damage by Contractor is Contractor's responsibility.

3.2 CLEANING

A. General:
   1. The cleaning process shall remove all grease, sand, silts, solids, rags, debris, etc. from each sewer segment, including the manholes.
   2. Only use cleaning materials and equipment that will not create hazards to the health or property and that will not interfere with treatment plant processes.
   3. Protect sewer pipes and manholes from damage during cleaning operations. Repair any damage caused by cleaning at no cost to the City of Boerne.

B. High velocity water jet cleaning:
   1. Equipment must be capable of producing 50 GPM at a pressure of 1,500 PSI for pipe cleaning and 3,500 PSI for manhole and structure cleaning.

2. Pressure gauge on discharge of wash water pumps must be accurate and working.
3. In older sewer mains, a pressure of less than 1,500 PSI may be used to avoid damage to the pipe.
4. Use conventional nozzles in pipe less than 18 IN in diameter.
5. Use nozzles that direct jets to the bottom of the pipe in pipe 18 IN and greater in diameter.
6. When under full pressure and flow, the nozzle must be kept moving. Reduce flow and pressure when nozzle is on hold or delayed to prevent damage to the pipe.
7. Provide a suitable trap in the downstream manhole to catch solids and debris for removal.

C. Mechanical cleaning
1. Mechanical cleaning equipment includes buckets, scrapers, rods, metal pigs, porcupines, root saws, snakes, scooters, sewer balls, kites, and heavy duty brushes driven by winches.
2. Equipment shall be approved by the City of Boerne before use.
3. Follow manufacturer's instructions for operation of equipment.
4. Experienced operators must be used to operate equipment to avoid damage to sewer pipes, manholes and structures.

3.3 WORK AREA

A. Maintain a clean work area and comply with Federal, State and local environmental and anti-pollution laws, ordinances, regulations, and codes.

B. Keep work area and surrounding premises free of accumulations of dirt, dust, waste materials, debris, and rubbish. Store in suitable containers until time of disposal.

C. Dispose of all dirt, waste materials, debris and rubbish in a licensed legal dump site in compliance with Federal, State and local laws and regulations.

3.4 DEMONSTRATION

A. Demonstrate to the satisfaction of the City Inspector the performance capabilities of the cleaning equipment proposed for use on the project.

B. If results of demonstration are not satisfactory provide appropriate attachments or equipment to meet specifications.

C. More than one type of equipment and attachments may be needed at one location to achieve a clean sewer main.

END OF SECTION

SECTION 02532
VIDEO INSPECTION OF SANITARY SEWERS

PART 1 - GENERAL

1.1 SUMMARY

A. Section includes inspecting sanitary sewer mains and service laterals by means of closed circuit video cameras and recorders.

B. Related Sections include but are not limited to:
   1. Division 0 - Bidding Requirements, Contract Forms, and Conditions of the Contract.
   2. Division 1 - General Requirements.
   3. Section 02530 – Sanitary Sewer Systems.
   4. Section 02531 – Cleaning Sanitary Sewers.

1.2 QUALITY ASSURANCE

A. Referenced standards:
   1. National Association of Sewer Service Companies (NASSCO):
      a. PACP – Standards for Pipeline Assessment and Certification Program.

1.3 SUBMITTALS

A. Shop Drawings:
   1. See Section 01340.
   2. Inspection Reports
   3. DVD of inspection.

PART 2 - PRODUCTS

2.1 RECORDING MEDIA

A. DVD:
   1. DVD-R or DVD+R format compatible with most DVD players.
   2. Recorded in MPEG compatible format.

PART 3 - EXECUTION

3.1 PREPARATION

A. Visually inspect manholes and sewers to determine the needed materials and equipment.

B. Ensure that all required equipment is available onsite and in good operating condition.

C. Clean sewers before inspecting in accordance with Section 02531.

D. Control the flow in the sewer being inspected to allow for an adequate inspection of the pipe condition.
   1. Flow control is required when the depth of flow is greater than 25% of the pipe diameter at the upstream manhole.
   2. Temporarily plug or block the upstream line to reduce the flow depth to less than 25% of the pipe diameter.
   3. If plugging or blocking flow will cause backups in services or overflow of sewage, provide bypass pumping to reduce the flow depth to less than 25% of the pipe diameter.

4. Under no circumstances shall the flow be interrupted or stopped, such that damage is done to either private or public property or sewage flows or overflows into a storm sewer or natural waterway.

3.2 EQUIPMENT

A. Television Camera: specifically designed and constructed for the internal inspection of sewer pipes.
   1. Lighting: built in to the camera to provide sufficient light for clear color images.
   2. Camera resolution: Minimum 640x480 in color.
   3. Aspect ratio: 4:3.
   4. Length measuring device shall be accurate to within one foot of distance from the center of the manhole at the beginning of the inspection.
   5. Lens shall be capable of rotating and panning to view the entire pipe surface and to look up laterals.

3.3 INSPECTION

A. General:
   1. The television camera shall be moved through the sewer pipe at a moderate rate not exceeding 30 feet per minute.
   2. The camera shall be centered in the pipe.
   3. Stop the camera to document the sewer condition.
   4. If the inspection cannot be completed because of an obstruction or pipe defect, conduct the inspection from the opposite manhole.

B. Video:
   1. Beginning of inspection shall include a title screen identifying the inspection:
      a. Project Name
      b. Date of inspection
      c. Station to Station location
      d. Size of sanitary sewer
      e. Street name or easement location
      f. Contractor name
   2. A counter shall be displayed in the lower right or lower left corner of the image that indicates the distance in feet from the center of the manhole at the beginning of the survey.

3.4 DOCUMENTATION

A. Inspection log:
   1. Line diagram or sketch of pipe inspected showing locations of defects found and other features of the sewer.
   2. Provide title information on log with DVD no. reference to video.
   3. Show the distance to each feature and defect found.
   4. Defects shall be identified in English and by NASSCO PACP defect codes, or other approved coding system.

B. DVD:
   1. Number each DVD to correspond with Inspection Log DVD numbers.
   2. Multiple inspections can be included on one DVD provided a menu is included to allow selection of pipe segment to be viewed.
   3. Video image on DVD must be sharp and clear to show the condition of the pipe.
   4. Defects should be noted by printed description and NASSCO PACP code, or other approved coding system.

END OF SECTION

SECTION 02560
NATURAL GAS DISTRIBUTION SYSTEM

PART 1 - GENERAL

1.1 SUMMARY

A. Section Includes:
   1. Pipe, valves and appurtenances for new natural gas distribution system construction.

B. Related Sections include but are not necessarily limited to:
   1. Division 0 - Bidding Requirements, Contract Forms, and Conditions of the Contract.
   2. Division 1 - General Requirements.
   3. Section 02110 - Site Clearing.
   4. Section 02221 - Trenching, Backfilling, and Compacting for Utilities.
   5. Section 02224 - Pipeline Undercrossings.
   6. Section 02260 - Topsoiling and Finished Grading.
   7. Section 03002 - Concrete.

C. Unit Prices:
   1. When unit prices are used to pay for construction of Natural Gas Distribution the following items shall be used with measurement and payment as specified below.
   2. Natural Gas Pipe of sizes indicated in bid form to include excavation, bedding, backfill, tracer wire, detectable warning tape, fittings, materials, labor, equipment, and appurtenances to install, clean, test and purge. Measurement shall be per linear foot installed from end of pipe to end of pipe through the center of all pipe and fiitings.
   3. Valves of the sizes indicated in bid form to include excavation, bedding, backfill, tracer wire, valve, valve box, materials, labor, equipment and appurtenances to install a complete and operational valve assembly. Measurement shall be per each valve installed.
   4. Locate Stations as indicated to include excavation, bedding, backfill, tracer wire, box, materials, labor, equipment and appurtenances to install a complete and operational locate station. Measurement shall be per each locate station installed.
   5. Service Pipe of the sizes indicated to include excavation, bedding, backfill, tracer wire, detectable warning tape, fittings, risers, stops, materials, labor, equipment, and appurtenances to install, clean, test and purge. Measurement shall be per linear foot installed measured from the center of the gas main to the end of the service pipe or to the riser.
   6. Excess Flow Valves as indicated in the bid form to include excavation, bedding, backfill, valve, tracer wire, materials, labor, equipment and appurtenances to install excess flow valves in accordance with the contract documents. Measurement shall be per each excess flow valve installed.

1.2 QUALITY ASSURANCE

A. Referenced Standards:
   1. American National Standards Institute (ANSI):
      a. B40.100, Pressure Gauges and Gauge Attachments.
   2. ASTM International (ASTM):
      a. A354, Standard Specification for Quenched and Tempered Alloy Steel Bolts, Studs, and Other Externally Threaded Fasteners.
      b. A563, Standard Specification for Carbon and Alloy Steel Nuts.
      c. A1011, Standard Specification for Steel, Sheet and Strip, Hot-Rolled, Carbon, Structural, High-Strength Low-Alloy, High-Strength Low-Alloy with Improved Formability, and Ultra-High Strength.

d. D2513, Standard Specification for Thermoplastic Gas Pressure Pipe, Tubing, and Fittings.
e. D2683, Standard Specification for Socket-Type Polyethylene Fittings for Outside Diameter-Controlled Polyethylene Pipe and Tubing.
f. D3261, Standard Specification for Butt Heat Fusion Polyethylene (PE) Plastic Fittings for Polyethylene (PE) Plastic Pipe and Tubing.
g. D3350, Standard Specification for Polyethylene Plastics Pipe and Fittings Materials.
h. D2774, Standard Practice for Underground Installation of Thermoplastic Pressure Piping.
i. D4956, Standard Specification for Retroreflective Sheeting for Traffic Control.
j. F1055, Standard Specification for Electrofusion Type Polyethylene Fittings for Outside Diameter Controlled Polyethylene Pipe and Tubing.
k. F2138, Standard Specification for Excess Flow Valves for Natural Gas Service.
l. F2509, Standard Specification for Field-assembled Anodeless Riser Kits for Use on Outside Diameter Controlled Polyethylene Gas Distribution Pipe and Tubing.
m. F2620, Standard Practice for Heat Fusion Joining of Polyethylene Pipe and Fittings.

B. Qualifications:
1. Poly fusion welders: Welders must be manufacturer certified to perform poly fusion welding of polyethylene pipe and fittings. Welders must carry certification card when welding. Certification must be for type of welding being performed including:
a. Butt fusion.
b. Socket fusion.
c. Saddle fusion.
d. Electrofusion.

1.3 SUBMITTALS

A. Shop Drawings:
1. See Section 01340 for requirements for the mechanics and administration of the submittal process.
2. Product technical data including:
a. Acknowledgement that products submitted meet requirements of standards referenced.
b. Manufacturer's installation instructions.

B. Certifications:
1. Poly fusion welding certificates.

C. Test reports:
1. Pipe pressure test reports.
2. Backfill test reports.

D. Record Information:
1. Copies of plan drawings showing the locations of pipe installation with pipe lot numbers and lengths as marked on the pipes.

PART 2 - PRODUCTS

2.1 PIPE AND FITTINGS

A. Polyethylene Pipe:
1. Acceptable Manufacturer: Performance Pipe, A division of Chevron Phillips Chemical Company, L.P., no substitutions.
2. Driscoplex 6500
3. ASTM D2513.
4. Material: PE 2406/2708 per ASTM D3350.
5. Sizes: 1 IN, 2 IN, 4 IN, 6 IN; IPS outside diameter controlled.

6. Wall thickness: DR 11.
7. Color: Yellow for gas service per APWA/ULCC.
8. Markings: Lot numbers with length markings every foot.

B. Polyethylene Fittings:
1. Acceptable Manufacturers:
   a. Performance Pipe, A division of Chevron Phillips Chemical Company, L.P.
   b. Central Plastics Company.
   c. Approved equal.
2. Fittings: ASTM D2513.
3. Material: PE2406/2708 per ASTM D3350.
4. Butt fusion fittings: ASTM D3261.
5. Socket type fittings: ASTM D2683.
6. Electrofusion fittings: ASTM F1055.

C. Service Risers:
1. Acceptable Manufacturer: Central Plastics Company, no substitutions.
2. Anode less per ASTM F2509.
3. Comply with 49 CFR 192.283.
4. 1 IN and 2 IN.

D. Sleeves:
1. Direct Bury: Sch. 40 PVC, ASTM D1785.
2. Horizontal Directional Drilling: Polyethylene pipe.
3. Casings for undercrossings: Steel per Section 02224.

2.2 VALVES

A. Line valves 1 IN and larger:
1. Polyethylene ball valves
2. Acceptable Manufacturers:
   a. R.W. Lyall & Company, Inc..
   b. Flowserve Nordstrom Valves, Flowserve Corporation.
   c. Elster Perfection.
   d. Approved equal.
3. Materials: PE2406/2708 per ASTM D3350.
4. Type: Full port.

B. Service stops 1 IN and 2 IN:
1. Brass gas cocks.
2. With locking ear.
3. Acceptable Manufacturer:
   a. Jomar International, Ltd.
   b. Approved equal.

C. Valve Boxes:
1. Plastic.
2. 5 ¼ IN diameter shaft.
3. Screw type with bottom section molded to fit over 2, 4, or 6 IN plastic valves.
4. Acceptable Manufacturers:
   a. Bingham and Taylor.
   b. Handley Industries, Inc.
   c. Approved equal.

D. Locks:
1. Acceptable Manufacturer: Highfield Mfg. Company, no substitutions.
2. Firomatic lockseal.
3. Lockseal stud: Highfield part no. 93210140.
4. Lockseal head: Highfield part no. 93280148.

E. Excess flow valves:
   1. ASTM F2138.
   2. Acceptable Manufacturers:
      a. Gas Breaker, Inc.: UMAC Model 41.
      b. Elster Perfection,
      c. Approved equal.

2.3 ACCESSORIES

A. Signs:
   1. Substrate: 0.080 IN (2 mm) thick aluminum.
   2. Printing layer:
      a. 5.9 mil engineer grade retroreflective vinyl.
      b. ASTM D4956.
      c. UV stable eco-solvent ink.
   3. Laminate: 3.0 mil Optically clear PVC film
      a. Scratch resistant.
      b. Chemical resistant.
      c. UV resistant.
   4. Mounting: 2 – 1/4 IN DIA holes on center, 1 IN from top and bottom edge.
   5. Corners: 1.5 IN radius.
   6. Posts:
      a. Steel channel shape, Power-Strut® or approved equal.
      b. ASTM A1011, Grade 33 Structural Steel.
      c. 1 5/8 IN by 1 5/8 IN with 9/16 IN DIA holes in face.
      d. Finish: Green baked on enamel.
      e. Cut to length required.
   7. Hardware:
      a. Zinc-coated hex head bolts: 1/4 IN DIA.
      b. ASTM A354 bolts, grade BC with ASTM A563 nuts.
      c. Use with zinc-coated washers and lock washer.

B. Tracer wire:
   1. Thermoplastic insulated, 600 Volt, type THHN/THWN-2.
   2. UL listed Standard 83 for direct burial.
   3. Solid copper conductor: 12 AWG.
   4. Jacket:
      a. Yellow.
      b. Nylon.
      c. Heat, oil and gasoline resistant.
   5. Split bolt connector for splice:
      a. Bolt and nut: Bronze alloy.
      b. Copper pressure bar.
      c. Size for 2, 12 AWG solid copper conductors.
      d. Insulate with a minimum of 2 layers of plastic electrical tape.

C. Trace wire locate boxes:
   1. Rim and lid:
      a. Cast iron or ductile iron.
      b. Standard pentagon head lock bolt.
      c. Nickel plated brass terminal(s) for tracer wire connection.
      d. Lettering on top of cover: “GAS LOCATE”
      e. Top color: Yellow.
   2. Body:
      a. 2 1/2 IN DIA ABS plastic tube.
      b. Length to fit to depth of tracer wire.
      c. Magnet embedded in tube wall.

2.4 SOURCE QUALITY CONTROL

A. Pipe: provide mill certificates with lot numbers and lengths to identify manufacture of piping and Source QC.

PART 3 - EXECUTION

3.1 LOCATION:

A. Horizontal: Min. 2 FT clearance to parallel utilities.

B. Vertical: Min. 12 IN clearance to crossing utilities and other below ground structures.

3.2 INSTALLATION

A. Install to lines and grades shown on the plans.

B. Excavation, bedding and backfill: See Section 02221 - Trenching, Backfilling, and Compacting for Utilities.
   1. Cover:
      a. Mains: 3 FT min., 6 FT max.
      b. Services: 2 FT min., 5 FT max.
   2. Sleeves:
      a. Install when vertical clearances to other utilities cannot be maintained.
      b. Install gas piping inside sleeve.
   3. Pipeline undercrossings:
      a. Install steel casing per Section 02224.
      b. Install vents on both ends of casing.
      c. Terminate vents with a screened gooseneck designed to not interfere with pedestrian and vehicular traffic.
      d. Install warnings signs on or adjacent to vents.

C. Install PE pipe in accordance with manufacturer's instructions and ASTM D2774.
   1. Lay pipe on sand bedding and ensure complete support of pipe haunches with bedding material.
   2. Install tracer wire one inch above top of pipe.
   3. Fuse pipe and fittings in accordance with ASTM F2620 and the manufacturer's instructions.
   4. Maintain a record of the lot numbers and footage marking of all pipe installed with record drawings. Records must be kept so that specific portions of pipe can be relocated in the future.

D. Valves:
   1. Install at locations indicated on plans.
   2. Install with stem vertical.
   3. Install valve box to protect valve. Ensure that pipe and valve do not support box.
   4. Adjust valve box to match final grades.
   5. Install concrete pad around top of the valve box to protect box.
   6. Install tracer wire in valve box, bring to top of box and coil sufficient slack to pull at least 24 IN above box.
   7. Note serial number of each valve on record drawings.
   8. Install sign to mark valve location as indicated on drawings.

E. Tracer wire locate boxes:
   1. Install at locations indicated on plans or at intervals of not more than 500 FT.
   2. Install top of box flush with pavement and 1 IN above grade in unpaved areas.
   3. Install concrete pad around top of box.
   4. Bring tracer wire up in box and provide sufficient length to bring wire ends to a minimum of 2 FT above grade.

5. Connect tracer wire to terminals on lid and coil slack in box.
6. Install sign to mark box location as indicated on drawings.

F. Service lines:
1. Install tapping tee on main using appropriate fusion methods.
2. Install service lines in locations indicated on the plans.
3. Install Excess flow valve in service line at the back of curb unless otherwise shown.
4. Cap ends of service lines with socket fused cap.
5. Mark location of service lines as indicated on the plans.
   a. Mark concrete curbs to provide permanent indication of service location.

G. Connection to existing mains: DO NOT MAKE CONNECTIONS TO EXISTING MAINS.
1. All connections to existing mains must be made by qualified persons employed by the gas utility.

H. Signs:
1. Install signs in locations shown on plans to identify gas main.
2. Set bottom of sign 7 FT from finished grade.
3. Anchor post in ground a minimum of 2 F.
4. If a post cannot be set securely in existing soil, set post in concrete fill.

3.3 CLEANING

A. Clean inside of pipe and fittings before and after installation.
1. Blow clean, dry compressed air through pipe and fittings to remove foreign material.
2. Swab or pig when necessary inside of installed pipe to remove construction debris.
3. Keep pipe ends closed to prevent entry of debris during construction.

3.4 FIELD QUALITY CONTROL

A. Perform all testing in the presence of City of Boerne personnel.

B. Pressure testing:
1. Use clean, dry compressed air to test piping.
2. Blow air through lines to clear of all foreign material.
3. Isolate section to be tested and install test gauges and valves.
4. Pressurize test section to 90 PSI minimum, 100 PSI maximum.
5. Maintain test pressure by adding air for one hour to stabilize test.
6. Record gauge reading, close all valves and hold pressure for 24 hours.
7. After 24 hours, record gauge reading.
8. Section passes test if drop in pressure is less than 0.5 PSI.
9. Once section has passed test, leave main under air pressure with test gauge in place until Utility connects main to existing system.
   a. Monitor pressure on a regular basis. If pressure is lost investigate immediately to find cause and repair. After repairs are made repeat pressure testing.

C. Backfill testing: In accordance with Section 02221.

D. Tracer wire test:
1. Test all tracer wire in presence of representative of the City of Boerne.
2. Hook up locator transmitter to tracer wire and ensure that receiver gets strong signal continuously along full length of pipe.
3. Repair any wires that do not carry signal sufficiently to provide strong locate signal at any point along the pipe line.
4. Add tracer wire locate boxes if necessary to ensure a strong locate signal along the full length of the pipe.

E. Correct all defects identified by testing until all tests are passed.

END OF SECTION

SECTION 02660
POTABLE WATER MAIN CONSTRUCTION

PART 1 - GENERAL

1.1 SUMMARY

A. Section Includes:
1. New potable water mains and appurtenances.
2. Coordination and interface with existing facilities and utilities.
3. Connections to existing potable water mains.
4. Testing, flushing and disinfection.

B. Related Sections include but are not necessarily limited to:
1. Division 0 - Bidding Requirements, Contract Forms, and Conditions of the Contract.
2. Division 1 - General Requirements.
3. Section 02110 - Site Clearing.
4. Section 02221 - Trenching, Backfilling, and Compacting for Utilities.
5. Section 02224 - Pipeline Undercrossings.
6. Section 02260 - Topsoiling and Finished Grading.
7. Section 03002 - Concrete.
8. Section 09905 – Paint and Protective Coatings.

1.2 QUALITY ASSURANCE

A. Referenced Standards:
1. American National Standards Institute (ANSI):
   a. B16.5, Pipe Flanges and Flanged Fittings.
   b. B16.26, Cast Copper Alloy Fittings for Flared Copper Tubes.
   c. B18.2.1, Square, Hex, Heavy Hex, and Askew Head Bolts and Hex, Heavy Hex, Hex Flange, Lobed Head, and Lag Screws (Inch Series).
   d. B18.2.2, Square and Hex Nuts (Inch Series).
2. American Society for Testing and Materials (ASTM):
   a. A47, Standard Specification for Ferritic Malleable Iron Castings.
   b. A48, Standard Specification for Gray Iron Castings.
   c. A126, Standard Specification for Gray Iron Castings for Valves, Flanges and Pipe Fittings.
   d. A269, Standard Specification for Seamless and Welded Austenitic Stainless Steel Tubing for General Service.
   e. A276, Standard Specification for Stainless Bars and Shapes.
   f. A436, Standard Specification for Austenitic Gray Iron Castings.
   g. A536, Standard Specification for Ductile Iron Castings.
   h. B62, Standard Specification for Composition Bronze or Ounce Metal Castings.
   i. B88, Standard Specification for Seamless Copper Water Tube.
   j. D2737, Standard Specification for Polyethylene (PE) Plastic Tubing.
   k. D2774, Standard Practice for Underground Installation of Thermoplastic Pressure Piping.
3. American Water Work Association (AWWA):
   a. B300, Standard for Hypochlorites.
   b. B301, Standard for Liquid Chlorine.
   c. C104, Standard for Cement-Mortar Lining for Ductile-Iron Pipe and Fittings for Water.
   d. C105, Standard for Polyethylene Encasement for Ductile-Iron Pipe Systems.
   e. C110, Standard for Ductile-Iron and Gray-Iron Fittings, 3 IN. through 48 IN. (76 mm through 1,219 mm), for Water.

f. C111, Standard for Rubber-Gasket Joints for Ductile-Iron Pressure Pipe and Fittings.
g. C151, Standard for Ductile-Iron Pipe, Centrifugally Cast, for Water.
h. C153, Standard for Ductile-Iron Compact Fittings for Water Service.
i. C500, Standard for Metal-Seated Gate Valves for Water Supply Service.
j. C502, Standard for Dry-Barrel Fire Hydrants.
k. C504, Standard for Rubber-Seated Butterfly Valves.
l. C508, Standard for Swing-Check Valves for Waterworks Service, 2 IN through 24 IN NPS.
m. C509, Standard for Resilient-Seated Gate Valves for Water Supply Service.
n. C510, Standard for Double Check Valve Backflow Prevention Assembly.
o. C511, Standard for Reduced-Pressure Principle Backflow Prevention Assembly.
p. C512, Standard for Air Release, Air/Vacuum, and Combination Air Valves for Waterworks Service.
q. C550, Standard for Protective Epoxy Interior Coatings for Valves and Hydrants.
r. C600, Standard for Installation of Ductile-Iron Water Mains and Their Appurtenances.
s. C605, Standard for Underground Installation of Polyvinyl Chloride (PVC) Pressure Pipe and Fittings for Water.
t. C606, Standard for Grooved and Shouldered Joints.
u. C651, Standard for Disinfecting Water Mains.
v. C800, Standard for Underground Service Line Valves and Fittings.
w. C900, Standard for Polyvinyl Chloride (PVC) Pressure Pipe and Fabricated Fittings, 4 IN through 12 IN (100mm through 300mm), for Water Distribution.
x. C905, Standard for Polyvinyl Chloride (PVC) Pressure Pipe and Fabricated Fittings, 14 IN through 48 IN (350mm through 1,200mm), for Water Transmission and Distribution.
y. C906, Standard for Polyethylene (PE) Pressure Pipe and Fittings, 4 In. (100 mm) Through 63 In. (1,600 mm), for Water Distribution and Transmission.
z. M17, Installation, Field Testing, and Maintenance of Fire Hydrants.

4. National Sanitation Foundation (NSF):
   a. Standard 14, Plastic Piping System Components and Related Materials.
   b. Standard 60, Drinking Water Treatment Chemicals – Health Effects.
   c. Standard 61, Drinking Water System Components – Health Effects.

B. Referenced Regulations:
   1. Texas Administrative Code (TAC)
      a. Title 30, Chapter 290, Water Hygiene Rules.
   2. Code of Federal Regulations (CFR)
      a. Title 40, Part 100-149.

1.3 DEFINITIONS

A. OS&Y: Outside Screw and Yoke.

B. NRS: Non-rising Stem.

C. RS: Rising Stem.

1.4 SUBMITTALS

A. Shop Drawings:
   1. See Section 01340.
   2. Product technical data including:
      a. Acknowledgement that products submitted meet requirements of standards referenced.
      b. Manufacturer's installation instructions.
      c. Attach technical product data on gaskets, pipe, fittings, and other components.
      d. Valve pressure and temperature rating.
      e. Valve material of construction.
      f. Special linings.
      g. Valve dimensions and weight.

h. Valve flow coefficient.
i. Pipe lubricants

3. Fabrication and/or layout drawings.
4. Certifications.
   a. Qualifications of lab performing disinfection analysis on water systems.
5. Test reports.
   a. Copies of pressure test results on all piping systems.
   b. Reports defining results of dielectric testing and corrective action taken.
   c. Disinfection test report.
   d. Notification of time and date of piping pressure tests.

B. Submit results of the leakage tests, identifying the specific length of pipe tested, the test pressure, the duration of test and the amount of leakage.

C. Submit satisfactory bacteriological test reports on disinfection requirements.

D. Operation and Maintenance Manuals:
   1. See Section 01340.

PART 2 - PRODUCTS

2.1 PIPE

A. Pipe size: 4 through 12 IN.
   1. Buried Ductile Iron:
      a. Materials: Ductile iron, Class 200.
      b. Reference: AWWA C151.
      c. Lining: Cement Mortar: AWWA C104.
      d. Coating: Bituminous.
      e. Encasement: Polyethylene: AWWA C105
      f. Fittings: AWWA C110 ductile iron. Optional AWWA C153 ductile iron compact fittings for sizes 3 to 16 IN.
      g. Joints: Push-on joints with mechanical (stuffing box type) joints at fittings and valves: AWWA C111.
      h. Joint restraint:
         1) Push-on Joint: Split serrated restraint harness.
            a) Designed specifically for Ductile Iron pipe at 350 PSI with minimum 2:1 safety factor.
            b) Material: Ductile Iron, ASTM A536, Grade 65-45-12.
            c) Bell Ring and Spigot Ring: Split serrated ring secured with clamping bolts to provide 360 degree contact with pipe. Serrations shall be bi-directional and designed to prevent point loading on pipe.
            d) Clamping bolts: ANSI B18.2/18.2.2, SAE Grade 5.
            e) T-Bolts, nuts, restraining rods: High strength, low alloy per AWWA C111.
         2) Mechanical Joint:
            a) As for Push-on Joint with retainer gland and gasket.
            b) Radial bolt type restrainer system
               (1) Designed specifically for Ductile Iron pipe at 350 PSI with minimum 2:1 safety factor.
               (2) Gland: Ductile Iron, ASTM A536, Grade 65-45-12.
               (3) Wedge restrainers: Heat treated ductile iron, Brinnel hardness: 370.
               (4) T-Bolts and nuts: High strength, low alloy per AWWA C111.
               (5) Gasket: SBR per AWWA C111.
   2. Buried PVC:
      a. Materials: PVC, DR14.
      b. Reference: AWWA C900.

c. Lining: Cement mortar on fittings only: AWWA C104.
d. Coating: Bituminous on fittings only.
e. Encasement: Polyethylene on fittings only: AWWA C105.
f. Fittings: AWWA C110 ductile iron. Optional AWWA C153 ductile iron compact fittings for sizes 3 to 16 IN.
g. Joints: Push-on joints with mechanical (stuffing box type) joints at fittings and valves.
h. Joint restraint:
1) Push-on Joint: Split serrated restraint harness.
a) Designed specifically for PVC pipe at 305 PSI with minimum 2:1 safety factor.
b) Material: Ductile Iron, ASTM A536, Grade 65-45-12.
c) Bell Ring and Spigot Ring: Split serrated ring secured with clamping bolts to provide 360 degree contact with pipe. Serrations shall be bi-directional and designed to prevent point loading on pipe.
d) Clamping bolts: ANSI B18.2.1/18.2.2, SAE Grade 5.
e) T-Bolts, nuts, restraining rods: High strength, low alloy per AWWA C111.
2) Mechanical Joint:
a) Designed specifically for PVC pipe at 305 PSI with minimum 2:1 safety factor.
b) Radial bolt type restrainer system
(1) Gland: Ductile Iron, ASTM A536, Grade 65-45-12.
(2) Wedge restrainers: Heat treated ductile iron, Brinnel hardness: 370.
(3) T-Bolts and nuts: High strength, low alloy per AWWA C111.
(4) Gasket: SBR per AWWA C111.
(5) Pipe size 4 IN: minimum 4 wedge retainers
(6) Pipe size 6 IN to 8 IN: minimum 6 wedge retainers.
(7) Pipe size 10 IN to 12 IN: minimum 8 wedge retainers.

3. Buried PE:
a. Materials: Polyethylene, PE 4710, DR11.
b. Reference: AWWA C906.
c. Fittings: Polyethylene, AWWA C906.
d. Joints:
1) Butt Fused.
2) Mechanical (stuffing box type) at valves with Butt Fused adapter that provides restraint in the joint.
3) Saddle Fusion for branch outlets.
4) Electrofusion couplings.

4. Exposed:
a. Material: Ductile iron, Class 350 if flanged. If grooved type joint system, use pipe thickness per AWWA C606.
b. References: AWWA C115.
c. Lining: Cement mortar: AWWA C104.
d. Coating: Paint per Section 09905.
e. Fittings: AWWA C110 ductile iron.
f. Joints: AWWA C115 flanged joints with flanges at valves and structure penetrations.

B. Pipe size: 14 through 48 IN.
1. Buried Ductile Iron.
a. Materials: Ductile iron, Class 200.
b. Reference: AWWA C151.
c. Lining: Cement Mortar: AWWA C104.
d. Coating: Bituminous.
e. Encasement: Polyethylene: AWWA C105.
f. Fittings: AWWA C110 ductile iron.
g. Joints: Push-on joints with mechanical (stuffing box type) joints at fittings and valves: AWWA C111.

h. Joint restraint:
   1) Push-on Joint: Split serrated restraint harness.
      a) Designed specifically for Ductile Iron pipe at 250 PSI with a 2:1 safety factor.
      b) Material: Ductile Iron, ASTM A536, Grade 65-45-12.
      c) Bell Ring and Spigot Ring: Split serrated ring secured with clamping bolts to provide 360 degree contact with pipe. Serrations shall be bi-directional and designed to prevent point loading on pipe.
      d) Clamping bolts: ANSI B18.2.1/18.2.2, SAE Grade 5.
      e) T-Bolts, nuts, restraining rods: High strength, low alloy per AWWA C111.
   2) Mechanical Joint:
      a) Designed specifically for Ductile Iron pipe at 250 PSI with a 2:1 safety factor.
      b) Radial bolt type restrainer system
         (1) Gland: Ductile Iron, ASTM A536, Grade 65-45-12.
         (2) Wedge restrainers: Heat treated ductile iron, Brinnel hardness: 370.
         (3) T-Bolts and nuts: High strength, low alloy per AWWA C111.
         (4) Gasket: SBR per AWWA C111.

2. Buried PVC:
   a. Materials: PVC, DR18.
   b. Reference: AWWA C905.
   c. Lining: Cement mortar on fittings only: AWWA C104.
   d. Coating: Bituminous on fittings only.
   e. Encasement: Polyethylene on fittings only: AWWA C105.
   f. Fittings: AWWA C110 ductile iron.
   g. Joints: Push-on joints with mechanical (stuffing box type) joints at fittings and valves.
   h. Joint restraint:
      1) Push-on Joint: Split serrated restraint harness.
         a) Designed specifically for PVC pipe at 200 PSI with 2:1 min. safety factor.
         b) Material: Ductile Iron, ASTM A536, Grade 65-45-12.
         c) Bell Ring and Spigot Ring: Split serrated ring secured with clamping bolts to provide 360 degree contact with pipe. Serrations shall be bi-directional and designed to prevent point loading on pipe.
         d) Clamping bolts: ANSI B18.2.1/18.2.2, SAE Grade 5.
         e) T-Bolts, nuts, restraining rods: High strength, low alloy per AWWA C111.
      2) Mechanical Joint:
         a) Deisgned specifically for PVC pipe at 200 PSI with min. 2:1 safety factor.
         b) Radial bolt type restrainer system
            (1) Gland: Ductile Iron, ASTM A536, Grade 65-45-12.
            (2) Wedge restrainers: Heat treated ductile iron, Brinnel hardness: 370.
            (3) T-Bolts and nuts: High strength, low alloy per AWWA C111.
            (4) Gasket: SBR per AWWA C111.

3. Buried PE:
   a. Materials: Polyethylene, PE 4710, DR 9.
   b. Reference: AWWA C906.
   c. Fittings: Polyethylene, AWWA C906.
   d. Joints:
      1) Butt Fused.
      2) Mechanical (stuffing box type) at valves and transitions to other pipe materials with Butt Fused adapter that provides restraint in the joint.
      3) Saddle Fusion for branch outlets.
      4) Electrofusion couplings.

4. Exposed:
   a. Material: Ductile iron, Class 200 if flanged. If grooved type joint system, use pipe thickness per AWWA C606.
   b. References: AWWA C115.
   c. Lining: Cement mortar: AWWA C104.

d. Coating: Paint per Section 09905.
e. Fittings: Either AWWA C110 ductile or gray iron.
f. Joints: AWWA C115 flanged joints with flanges at valves and structure penetrations.

C. Service Line:
1. Sizes ¾ through 1 IN:
a. Copper Tube:
1) ASTM B88.
2) Type K.
3) annealed.
b. HDPE Plastic Tubing:
1) ASTM D2737, PE4710, CTS.
2) SDR 9.
3) Stiffener inserts: Stainless steel tubing, ASTM A269 Type 304.
c. Copper Fittings: ANSI B16.26; wrought-copper, compression type.
2. Sizes 1 ½ IN through 2 IN:
a. HDPE Plastic Tubing:
1) ASTM D2737, PE4710, CTS.
2) SDR 9.
3) Stiffener inserts: Stainless steel tubing, ASTM A269, Type 304.
b. Copper Fittings: ANSI B16.26; wrought-copper, compression type.
3. Sizes greater than 2 IN: Pipe as specified above.

2.2 VALVES

A. Resilient Seat Gate Valves, 4 to 12 IN DIA:
1. Comply with AWWA C509.
2. Materials:
a. Stem and stem nut - bronze.
1) Wetted bronze parts in low zinc bronze.
2) Aluminum bronze components: heat treated per AWWA C504.
b. Body, gate: ductile iron, ASTM A536, Grade 65-45-12.
c. Resilient seat: Styrene Butadiene Rubber (SBR).
3. Design requirements:
a. 200 psi working pressure.
b. Buried - NRS O-ring stem seal.
c. Exposed - NRS, O-ring, stem seal, hand wheel, with open/close indicator.
d. Counter clockwise open rotation.
4. Fusion bonded epoxy coating interior and exterior except stainless steel and bearing surfaces.
a. Comply with AWWA C550.
1) Wetted bronze parts in low zinc bronze.
2) Aluminum bronze components: heat treated per AWWA C504.
5. Acceptable Manufacturers:
a. Mueller.
b. Clow.

B. Butterfly valves (greater than 14 IN DIA):
1. Comply with AWWA C504.
2. Materials:
a. Valve bodies:
1) ASTM A126, Class B or ASTM A536 Grade 65-45-12 ductile iron.
2) Wafer valves may be constructed of ASTM A48, Class 40 cast iron.
b. Valve shafts:
1) Stainless steel, 18-8, Type 304 or 316.
c. Valve discs:
1) ASTM A48, Class 40 cast iron. or

2) ASTM A536, Grade 65-45-12 ductile iron. or
3) ASTM A436, Type 1 alloy cast iron. or
4) Bronze in accordance with AWWA C504.

d. Valve seats:
1) Natural rubber.

e. Mating surfaces:
1) Valves less than 30 IN: ASTM A276, 18-8, stainless steel or bronze.
2) Valves 30 IN and larger: ASTM A276, 18-8, stainless steel.

3. Design Requirements:
a. Seat type: Resilient. Comply with AWWA C504.
b. Exposed and submerged valves 14 through 20 IN.
1) Body type: Wafer or short body flange (laying length may vary from AWWA C504).
2) Equip wafer type with fully tapped anchor lugs drilled per ANSI B16.5.
c. Exposed and submerged valves 24 IN and larger:
1) Body type: Short body flange.
2) Working pressure: Rated for 150 psi (Class 150B per AWWA C504).
d. Direct buried valves:
1) Body type: Short body flange.
2) Working pressure: Rated for 150 psi (Class 150B per AWWA C504).

4. Acceptable Manufacturers:
a. Mueller.
b. Clow.

C. Buried Valve Actuators:
1. Provide screw or slide type adjustable, two-piece cast iron valve box of sufficient height to reach grade without the use of additional extensions, 5 IN minimum diameter, 3/16 IN minimum thickness, and identifying cast iron cover.
2. Box base to enclose buried valve gear box or bonnet.
3. Provide 2 IN standard actuator nuts complying with Section 3.16 of AWWA C500.
4. Provide at least two tee-handle keys for actuator nuts, with 5 FT extension between key and handle.
5. Extension Stem:
a. Provide for buried valves greater than 4 FT below finish grade.
b. Extend to within 6 IN of finish grade.
6. Provide concrete pad encasement of valve box as shown for all buried valves.

D. Exposed Valve Manual Actuators:
1. Provide for all exposed valves not having electric or cylinder actuators.
2. Provide handwheels for gate and globe valves.
a. Size handwheels for valves in accordance with AWWA C500.
3. Provide lever actuators for plug valves, butterfly valves and ball valves 6 IN DIA and smaller.
a. Lever actuators for butterfly valves shall have a minimum of 5 intermediate lock positions between full open and full close.
b. Provide at least two levers for each type and size of valve furnished.
4. Gear actuators required for plug valves, butterfly valves, and ball valves 8 IN DIA and larger.
5. Provide gearing for gate valves 20 IN and larger in accordance with AWWA C500.
6. Gear actuators to be totally enclosed, permanently lubricated and with sealed bearings.
7. Provide chain actuators for valves 6 FT or higher from finish floor to valve centerline.
a. Cadmium-plated chain looped to within 3 FT of finish floor.
b. Equip chain wheels with chain guides to permit rapid operation with reasonable side pull without "gagging" the wheel.
8. Provide cast iron floor stands where shown on Drawings. Stands to be furnished by valve manufacturer with actuator.

a. Stand or actuator to include thrust bearings for valve operation and weight of accessories.

E. Swing Check Valve:
1. Comply with AWWA C508.
2. Acceptable manufacturers:
   a. Mueller.
   b. Clow.
   c. Or approved equal.
3. Materials:
   a. Body and cover: Cast iron.
   b. Seat ring, hinge: Bronze.
   c. Disc:
      1) 3 to 4 IN: Bronze.
      2) 6 to 24 IN: Cast iron with rubber face.
   d. Hinge shaft: Stainless steel.
   e. Bearings, connecting hardware: Bronze.
4. Design requirements:
   a. 175 psi working pressure (3 to 12 IN).
   b. 150 psi working pressure (14 to 24 IN).
   c. Furnish with outside weight and lever or lever and spring.

F. Air Release Valve:
1. Comply with AWWA C512.
2. Acceptable manufacturers:
   a. APCO 200A, 1 IN inlet.
   b. GA Industries, Figure 920, 1 IN inlet.
   c. Or approved equal.
3. Materials:
   a. Body and cover: Cast iron or semi-steel.
   b. Float: Stainless steel.
   c. Linkage and trim: Bronze or stainless steel.
4. Design requirements:
   a. Working pressure: 150 psi.
   b. Release Min. 5 cfm at 10 psi differential pressure.
5. Accessories:
   a. Curb valve:
      1) 1 IN Mueller B-25209.
      2) 1/4 turn.
      3) Mueller 110 CCC both ends.
   b. Vault: Cast iron meter box with heavy duty lid.
   c. Water Piping: Copper Tubing, ASTM B88, Type K, annealed.
   d. Air Piping: Schedule 80 PVC, ASTM D1785.

G. Combination Air Release Valves:
1. Comply with AWWA C512.
2. Acceptable manufacturers:
   a. GA Industries, Figure 980.
   b. APCO Series 1700.
   c. Or approved equal.
3. Materials:
   a. Body and cover: Cast iron.
   b. Float, linkage and hardware: Stainless steel.
   c. Seat: Buna-N.
4. Design requirements:
   a. Working pressure: 150 psi.
   b. Unit may be combined in one valve body or be duplex type.

c. Provide surge check unit.
d. Provide butterfly isolation valve.

H. Double Check Detector Assembly (DCDA):
1. AWWA C510.
2. Body: Epoxy coated cast iron.
3. Seats: Bronze.
4. Disc Holder: Bronze.
5. Trim: Stainless Steel.
6. Check Valve Discs: Bronze.
7. Test Cocks: Bronze body ball valves.
8. With OS&Y resilient seated gate valves.
9. Detector Meter:
a. Register: gallons per minute and total in gallons.
b. 5/8" x ¾" Meter coupling connections
c. Badger Meter, Model 25 or approved equal.
10. Install within 40 FT of water main.
11. Register with Boerne Public Works Department.

I. Reduced Pressure Detector Assembly (RPDA):
1. AWWA C511.
2. Body: Epoxy coated cast iron.
3. Seats: Bronze.
4. Trim: Stainless Steel.
5. Relief valve body:
a. 2 ½ IN to 3 IN: bronze.
b. 4 IN to 10 IN: Epoxy coated cast iron.
6. Test cocks: Bronze body ball valves.
7. With OS&Y resilient seated gate valves.
8. Detector Meter:
a. Register: gallons per minute and total in gallons.
b. 5/8" x ¾" meter coupling connections.
c. Badger Meter Model 25, or approved equal.
9. Install within 40 FT of water main.
10. Install in location not subject to submersion.
11. Register with Boerne Public Works Department.

J. Reduced Pressure Zone (RPZ) assembly
1. Use only on metered services.
2. AWWA C511
3. Body: Epoxy coated cast iron.
4. Seats: Bronze.
5. Trim: Stainless steel.
6. Relief valve body:
a. 2 ½ IN to 3 IN: Bronze.
b. 4 IN to 10 IN: Epoxy coated cast iron.
7. Test cocks: Bronze body ball valves.
8. With OS&Y resilient seated gate valves.
9. Install within 40 FT of water main.
10. Install in location not subject to submersion.
11. Register with Boerne Public Works Department.

2.3 FIRE HYDRANTS.

A. Design and Fabrication:
1. AWWA C502, dry-barrel post-type.
2. 5 ¼ IN main valve.

3. 2 hose nozzles and 1 pumper nozzle.
4. Bury depth as required.
   a. Minimum 4 FT bury depth.
   b. Only one extension is allowed to make grade and it must be less than the hydrants bury depth without extension.
5. Inlet connection: 6 IN mechanical joint.
6. Operating nut: 1 ½ IN pentagon, turn clockwise to open main valve.
7. Nozzle threads: NH or NST standard fire hose threads.
8. Color: red with a yellow bonnet.

B. Acceptable Manufacturers:
   1. Mueller: Model A-423.
   2. Submit requests for substitution to the City of Boerne.

C. Assembly
   1. Valve and Hydrant Tee:
      a. Plain end branch with anchor ring.
      b. Ductile iron rotatable MJ gland on plain end branch.
      c. MJ joints on run.
   2. Valve: Resilient Seat Gate Valve per 2.2.A. with MJ ends.
   3. Connecting pipes:
      a. Plain end with joint restraint glands.
      b. Fabricated connecting pipe with MJ glands and anchor rings.
         1) At least one gland must be rotatable.

2.4 END OF MAIN BLOWOFF

A. Provide reaction block and flush type fire hydrant for end of main blowoff.

B. Flush type fire hydrant:
   a. 2-1/8 IN Flush type fire hydrant
   b. AWWA C502.
   c. One 2-1/2 IN hose nozzle.
   d. 150 PSI working pressure.
   e. 300 PSI test pressure.
   f. Dry barrel design.
   g. Compression type main valve.
   h. Cast iron flush box with non-locking lid.
   i. 1 ½ IN Pentagon operating nut, counter-clockwise to open.
   j. Field replaceable hose nozzle.
   k. Dual bronze drain valves.
   l. Mueller A-412 or approved equal.

2.5 ACCESSORIES

A. Underground warning tape:
   1. Material: Polyethylene with metallic core.
   2. Thickness: 3.5 mils.
   3. Tensile strength: 1750 psi.
   4. Size: 6 IN wide (minimum).
   5. Legend: Preprinted continuously.
      a. “CAUTION – WATER LINE BURIED BELOW”
      b. Black lettering on blue background.

B. Tapping Sleeve and Tapping Valve: Use sleeve and valve compatible with tapping machine.
   1. Tapping Sleeve: Stainless Steel, 2-piece bolted sleeve with flanged outlet for new branch connection.
   2. Ends: mechanical-joint with rubber gaskets or sealing rings in sleeve body.

3. Tapping Valve: Resilient Seat Gate Valve per 2.2.A. with MJ end and flanged end to match tapping sleeve.

C. Service Saddles for services through 2 IN::
   1. PVC Main:
      a. James Jones J969 or equal.
      b. Bronze body with double Stainless Steel straps and stainless steel nuts.
      c. Buna-N O-ring gasket.
      d. Outlet:
         1) ¾ IN to 1 IN: AWWA C800 taper thread for corporation stop.
         2) 1 ½ IN to 2 IN: AWWA C800 IP thread for corporation stop.
   2. Ductile Iron Main:
      a. James Jones J979 or equal.
      b. Bronze body with double silicone bronze straps and bronze nuts.
      c. Buna-N O-ring gasket.
      d. Outlet:
         1) ¾ IN to 1 IN: AWWA C800 taper thread for corporation stop.
         2) 1 ½ IN to 2 IN: AWWA C800 IP thread for corporation stop.

D. Corporation Stops:
   1. ¾ IN to 1 IN:
      a. Mueller B-25008.
      b. ASTM B62 Brass body.
      c. Mueller 300 ball valve.
      d. Inlet: AWWA C800 taper thread.
      e. Outlet: Mueller 110 compression outlet for CTS OD tubing.
   2. 1 ½ IN to 2 IN:
      a. Mueller B-25028.
      b. ASTM B62 Brass body.
      c. Mueller 300 ball valve.
      d. Inlet: AWWA C800 IP thread.
      e. Outlet: Mueller 110 compression for CTS OD tubing.

E. Curb Stops:
   1. ¾ IN to 1 IN:
      a. Mueller B-24350.
      b. ASTM B62 Brass body.
      c. Mueller 300 ball valve.
      d. Wide tee head with lock wing.
      e. Inlet: Mueller 110 compression for CTS OD tubing.
      f. Outlet: Meter swivel nut..
   2. 1 ½ IN to 2 IN:
      a. Mueller B-24335.
      b. ASTM B62 Brass body.
      c. Mueller 300 ball valve.
      d. Wide tee head with lock wing.
      e. Inlet: Mueller 110 compression for CTS OD tubing.
      f. Outlet: Two bolt meter flange.

F. Angle Stops:
   1. ¾ IN to 1 IN:
      a. Mueller B-24258.
      b. ASTM B62 Brass body.
      c. Mueller 300 ball valve.
      d. Wide tee head with lock wing.
      e. Inlet: Mueller 110 compression for CTS OD tubing.
      f. Outlet: Meter swivel nut..

2. 1 ½ IN to 2 IN:
    a. Mueller B-24276.
    b. ASTM B62 Brass body.
    c. Mueller 300 ball valve.
    d. Wide tee head with lock wing.
    e. Inlet: Mueller 110 compression for CTS OD tubing.
    f. Outlet: Two bolt meter flange.

G. Service Fittings:
1. Unions, couplings, bends, tees, wyes and U-branch connections.
2. Cast Bronze, ASTM B62.
3. Mueller 110 compression connections for CTS tubing or equal.

H. Water Meter Boxes:
1. ¾ IN to 1 IN Service:
    a. Manufacturer: DFW Plastics, Inc.
        1) Body: DFW36C.
        2) Lid: DFW36C-RKSBSMTR.
    b. Or approved equal.
2. 1 ½ IN to 2 IN Service:
    a. Manufacturer: DFW Plastics, Inc.
        1) Body: D1730C-18.
        2) Lid: D1730C-KSBSM
    b. Or approved equal.

I. Valve Boxes:
1. Valves to 12 IN: Two-piece screw type.
2. Valves greater than 12 IN: Three-piece screw type.
3. 5 ¼ IN diameter shaft.
4. Gray iron casting.
5. Lid
    a. Locking type.
    b. Gray iron casting.
    c. Legend: “Water”.

J. Pipe Couplings: Iron-body sleeve assembly, fabricated to match OD of pipes to be joined.
1. Sleeve: ASTM A 126, Class B, gray iron.
2. Followers: ASTM A47, malleable iron; or ASTM A536, ductile iron.
3. Gaskets: Rubber.
4. Bolts and Nuts: AWWA C111.
5. Finish: Enamel paint.

K. Tracer Wire
1. Insulation rated for 600V.
2. 12 AWG solid copper conductor.
3. UL 83 for THHN/THWN and THHN/THWN-2 insulation.
4. UL listed for direct burial.
5. Jacket:
    a. Blue.
    b. Nylon.
    c. Heat, oil and gasoline resistant.
6. Split bolt connector for splice:
    a. Bolt and nut: Bronze alloy.
    b. Copper pressure bar.
    c. Size for 2, 12 AWG solid copper conductors.
    d. Insulate with a minimum of 2 layers of plastic electrical tape.

L. Tracer Wire Locate Boxes

1. Rim and lid:
    a. Cast iron or ductile iron.
    b. Standard pentagon head lock bolt.
    c. Nickel plated brass terminal(s) for tracer wire connection.
    d. Lettering on top of cover: “WATER LOCATE”
    e. Top color: Blue.
2. Body:
    a. 2 1/2 IN DIA ABS plastic tube.
    b. Length to fit to depth of tracer wire.
    c. Magnet embedded in tube wall.

2.6 SOURCE QUALITY CONTROL

A. All plastic piping and components must be certified to comply with NSF Standard 14.

B. All chemicals used for disinfection and cleaning of water system components must be certified to comply with NSF Standard 60.

C. All water system products must be certified to comply with NSF Standard 61.

D. All water system products must be supplied in accordance with 30 TAC 290.

PART 3 - EXECUTION

3.1 INSTALLATION, GENERAL

A. Install products in accordance with manufacturer's instructions.

B. Install Ductile Iron water mains in accordance with AWWA C600.

C. Install PVC water mains in accordance with AWWA C605.

D. Install PE water mains in accordance with ASTM D2774.

E. Comply with applicable provisions of 30 TAC 290 and 40 CFR 100-149.

F. Install water main to the line and grade on the Drawings. Stake water mains at a minimum 100 FT interval with depth of cuts monitored.

G. Notify utility representative prior to construction to obtain available information on location of existing utilities. The Contractor shall be responsible for locating all utilities.

H. Field verify depth of utilities that will be crossed.
    1. Adjust water main elevation as required during construction.
    2. No separate payment will be made for field verification or adjustment of main depths as required.

I. Restore all existing structures or services damaged by Contractor's operations at no cost to Owner.

3.2 BURIED INSTALLATION

A. Unless otherwise shown on the Drawings, provide a minimum of 4 FT and maximum of 6 FT earth cover over water mains.

B. Enter and exit through structure walls, floors, and ceilings by using penetrations and seals specified in Section 01800 and as shown on Drawings.

C. When entering or leaving structures with buried mechanical joint piping, install joint within 2 FT of point where pipe enters or leaves structure. Install second joint not more than 6 FT nor less than 4 FT from first joint.

D. Install expansion devices as necessary to allow expansion and contraction movement.

E. Laying Pipe In Trench:
   1. Excavate and backfill trench in accordance with Section 02221.
   2. Clean each pipe length thoroughly and inspect for compliance to Specifications.
   3. Grade trench bottom and excavate for pipe bell and lay pipe on trench bottom.
   4. Install gasket or joint material according to manufacturer's directions after joints have been thoroughly cleaned and examined.
   5. Except for first two joints, before making final connections of joints, install two full sections of pipe with earth tamped along side of pipe or final with bedding material placed.
   6. Lay pipe in only suitable weather with good trench conditions. Never lay pipe in water except where approved by Engineer.
   7. Seal open end of line with watertight plug if pipe laying stopped.
   8. Remove water in trench before removal of plug.

F. Lining Up Push-On Joint Piping:
   1. Lay piping on route lines shown on Drawings.
   2. Deflect from straight alignments or grades by vertical or horizontal curves or offsets.
   3. Observe maximum deflection values stated in manufacturer's written literature.
   4. Provide special bends when specified or where required alignment exceeds allowable deflections stipulated.
   5. Install shorter lengths of pipe in such length and number that angular deflection of any joint, as represented by specified maximum deflection, is not exceeded.

G. Anchorage and Blocking:
   1. Provide reaction blocking, anchors, joint harnesses, or other acceptable means for preventing movement of piping caused by forces in or on buried piping tees, wye branches, plugs, or bends.
   2. Place concrete blocking so that it extends from fitting into solid undisturbed earth wall. Concrete blocks shall not cover pipe joints.
   3. Provide bearing area of concrete in accordance with drawing detail.

H. Install underground hazard warning tape 12 IN below finished grade in unpaved areas and 6 IN below subgrade in paved areas.

I. Install insulating components where dissimilar metals are joined together.

J. Install tracer wires continuously within one inch above top of pipe, or tape to top of pipe.

K. Tracer wire locate boxes:
   1. Install at locations indicated on plans or at intervals no more than 500 FT apart.
   2. Install top of box flush with pavement and 1 IN above grade in unpaved areas.
   3. Install concrete pad around top of box.
   4. Bring tracer wire up in box and provide sufficient length to bring wire ends to a minimum of 2 FT above final grade.
   5. Connect tracer wire to terminals on lid and coil slack in box.
   6.

3.3 EXPOSED PIPING INSTALLATION

A. Install piping in vertical and horizontal alignment as shown on Drawings.

B. Install grooved joint piping in accordance with AWWA C606.

C. Enter and exit through structure walls, floor and ceilings using penetrations and seals specified in Section 01800 and as shown on the Drawings.

D. Install vertical piping runs plumb and horizontal piping runs parallel with structure walls.

E. Paint piping in accordance with Section 09905.

F. Pipe Support:
   1. Use methods of piping support as shown on Drawings.

2. Size pipe supports with consideration to specific gravity of liquid being piped.

G. Locate and size sleeves and castings required for piping system. Arrange for chases, recesses, inserts or anchors at proper elevation and location.

H. Use reducing fittings throughout piping systems. Bushings will not be allowed unless specifically approved.

I. Equipment Drainage and Miscellaneous Piping:
   1. Provide drip pans and piping at equipment where condensation may occur.
   2. Hard pipe stuffing box leakage to nearest floor drain.
   3. Avoid piping over electrical components such as motor control centers, panelboards, etc.
      a. If piping must be so routed, utilize 16 GA, 316 stainless steel drip pan under piping and over full length of electrical equipment.
      b. Hard pipe drainage to nearest floor drain.
   4. Collect system condensate at drip pockets, traps and blowoff valves.
   5. Provide drainage for process piping at locations shown on Drawings in accordance with Drawing details.

J. Unions:
   1. Install in position which will permit valve or equipment to be removed without dismantling adjacent piping.
   2. Mechanical type couplings may serve as unions.
   3. Additional flange unions are not required at flanged connections.

K. Install expansion devices as necessary to allow expansion/contraction movement.

L. Provide full face gaskets on all systems.

M. Anchorage and Blocking:
   1. Block, anchor, or harness exposed piping subjected to forces in which joints are installed to prevent separation of joints and transmission of stress into equipment or structural components not designed to resist those stresses.

N. Equipment Pipe Connections:
   1. Equipment - General:
      a. Exercise care in bolting flanged joints so that there is no restraint on the opposite end of pipe or fitting which would prevent uniform gasket pressure at connection or would cause unnecessary stresses to be transmitted to equipment flanges.
      b. Where push-on joints are used in conjunction with flanged joints, final positioning of push-on joints shall not be made until flange joints have been tightened without strain.
      c. Tighten flange bolts at uniform rate which will result in uniform gasket compression over entire area of joint. Provide tightening torque in accordance with manufacturer's recommendations.
      d. Support and match flange faces to uniform contact over their entire face area prior to installation of any bolt between the piping flange and equipment connecting flange.
      e. Permit piping connected to equipment to freely move in directions parallel to longitudinal centerline when and while bolts in connection flange are tightened.
      f. Align, level, and wedge equipment into place during fitting and alignment of connecting piping.
      g. Grout equipment into place prior to final bolting of piping but not before initial fitting and alignment.
      h. To provide maximum flexibility and ease of alignment, assemble connecting piping with gaskets in place and minimum of four bolts per joint installed and tightened. Test alignment by loosening flange bolts to see if there is any change in relationship of piping flange with equipment connecting flange. Realign as necessary, install flange bolts and make equipment connection.
      i. Provide utility connections to equipment shown on Drawings, scheduled or specified.

O. Provide insulating components where dissimilar metals are joined together.

3.4 VALVE INSTALLATION

A. Install products in accordance with manufacturer's instructions.

B. Painting Requirements:
   1. Comply with Section 09905 for painting and protective coatings.

C. Setting Buried Valves:
   1. Locate valves installed in pipe trenches where buried pipe indicated on Drawings.
   2. Set valves and valve boxes plumb.
   3. Place valve boxes directly over valves with top of box being brought to surface of finished grade.
   4. Install in closed position.
   5. Place valve on firm footing in trench to prevent settling and excessive strain on connection to pipe.
   6. After installation, backfill up to top of box for a minimum distance of 4 FT on each side of box.

D. Support exposed valves and piping adjacent to valves independently to eliminate pipe loads being transferred to valve and valve loads being transferred to the piping.

E. For ground coupling valves, install rigid type couplings or provide separate support to prevent rotation of valve from installed position.

F. Where larger buried gate valves utilize smaller bypass valves, provide a second valve box installed over the bypass valve operating nut.

G. Do not install gate valves inverted or with the stems sloped more than 45 degrees from the upright unless the valve was ordered and manufactured specifically for this orientation.

H. For threaded valves, provide union on one side within 2 FT of valve to allow valve removal.

I. Install valves accessible for operation, inspection, and maintenance.

3.5 FIRE HYDRANT INSTALLATION

A. Install hydrants at locations indicated in accordance with AWWA M17 and the following:
   1. Remove foreign material from barrel of hydrant before placement.
   2. Install plumb and at same elevation as connecting pipe and main.
   3. Place each hydrant on a slab of concrete not less than 6 IN thick and 18 IN SQ.
   4. Block backside of hydrant, opposite pipe connection, with concrete firmly wedged between hydrant and vertical face of undisturbed trench.
   5. Place granular bedding material around base of hydrant to the dimensions shown in the Drawings.
   6. Firmly tamp carefully compacted backfill around hydrant to surface of ground and to a distance of 5 FT in front of hydrant.

B. Coatings and finishes:
   1. Provide hydrant with below grade and above grade coatings as per Section 09905.
   2. Paint fire hydrant red with a yellow bonnet.

3.6 INTERRUPTION OF SERVICE

A. Interruption of service to water users shall not exceed 4 HRS. Notify City of Boerne in writing a minimum of 7 business days in advance of scheduled interruption. The City of Boerne will notify water users of interruption of service. Interruption of service may only be allowed during times of minimum demand, which may be at night as determined by the City of Boerne.

3.7 UNDERGROUND SERVICES

A. Connect existing water services to the new water mains following acceptance of new water main by City of Boerne. Repair damage to existing water service using copper or HDPE pipe and union the same size as existing service.

B. Connect new services to new water main as installation of the water main progresses.
   1. Use service saddle and corporation stop to make connection to main.
   2. Use stainless steel inserts in PE service pipe when connecting to corporation stops, angle stops, and fittings.
   3. Install angle stop on the end of the service pipe at the location indicated for the meter box.
   4. Install meter box with top set for final grade.
   5. Mark and protect services from damage by other construction.

3.8 PROTECTION OF EXISTING UTILITIES

A. Verify the location of all underground utilities. Omission from, or the inclusion of utility locations on the plans is not to be considered as the nonexistence of or a definite location of existing underground utilities.

B. Notify a representative of the underground utilities 24 HRS in advance of crossings.

3.9 CONNECTIONS TO EXISTING WATER MAINS

A. Obtain approval from the City of Boerne Director of Public Works prior to making any connections to existing water mains. Ensure that connections are being made to Potable water mains.

B. Make connections to existing water mains as shown on Drawings, by attaching to existing or changed fitting. Cost for making connections shall include cost of all fittings including flexible couplings, and shall be included in the bid unit price of the water main.

C. Where no existing fitting exists water mains may be tapped with a tapping sleeve and valve.
   1. Ensure that is existing pipe is competent enough to withstand tapping before installing the tapping sleeve. Notify the City of Boerne if pipe appears to be incompetent.
   2. Install tapping sleeve on competent pipe tightening bolts in proper sequence to distribute loads evenly on the existing pipe and ensure a tight seal.
   3. Install the tapping valve and use appropriate adaptors for the tapping machine to cut the existing pipe.
   4. For size on size taps, use a cutter with a slightly smaller diameter to ensure retrieval of the coupon.
   5. Once tap is complete, close tapping valve and remove tapping machine. Protect tapping valve with a blind flange or restrained plug (cap) on the valve. The flange can be tapped for a jumper to be used to load, flush, test and disinfect the new main before completing the connection.
   6. Where the conection is made to an existing water main that is not isolated from the distribution system, it shall be termed a “wet connection”.
   7. Where the connection is made to an existing water main which can be adequately isolated from the distribution system, it shall be termed a "dry connection."

D. Contractor is responsible for controlling and disposing of water in the trench at no additional cost to the Owner.

3.10 WATER MAINS IN THE VICINITY OF SEWERS

A. Comply with the provisions of 30 TAC 290.44.

B. Do not construct water mains parallel to sewers with less than 10 FT of separation.

C. When crossing house sewers, storm sewers or sanitary sewers center an 18 or 20 FT joint of water pipe over the sewer pipe and provide a vertical separation of at least 24 IN between the bottom of the water main and the top of the sewer, whenever possible. If the sewer is leaking replace a minimum of 20 FT of the sewer centered on the water main crossing with 150 psi pressure rated sewer pipe. Crossings not meeting the requirement of this paragraph require the approval of the City of Boerne and must meet the requirements of 30 TAC 290.44.

D. Payment for crossings shall be included in the bid unit price of the water main.

3.11 FIELD QUALITY CONTROL

A. Hydrostatic Testing:
   1. Hydrostatically test all valves, hydrants, pipe and fittings.
      a. Ductile Iron Pipe: AWWA C600.
      b. PVC Pipe: AWWA C605.
   2. Test Pressure:
      a. Minimum 1.25 times the normal working pressure at the highest point in the system.
      b. Minimum 1.50 times the normal working pressure at the test point.
      c. Minimum 150 psi.
   3. Furnish all necessary apparatus to run hydrostatic test, including necessary taps into the pipe. Prior to pressure testing, expel air from the pipe. Install corporation cocks at all high points in water main to allow air to be expelled. After pipe has been laid and backfilled, slowly fill each valved section of pipe with water and apply a test pressure of 150 psi. After air has been expelled, close corporation cocks and apply test pressure. The duration of each hydrostatic test to be a minimum of 2 HRS.
   4. Measure leakage from water main while test pressure is applied. Leakage is defined as the quantity of water that must be supplied into the pipe to maintain the specified leakage test pressure within 5 psi of the initial test pressure. No pipe installation will be accepted if leakage is greater than the following:
      a. For Ductile Iron Pipe, maximum allowable leakage in gallons per hour per 1,000 feet of pipe:

	Nominal Pipe Diameter (IN)						
Avg. Test Pressure (psi)	4	6	8	10	12	14	16
450	0.64	0.95	1.27	1.59	1.91	2.23	2.55
400	0.60	0.90	1.20	1.50	1.80	2.10	2.40
350	0.56	0.84	1.12	1.40	1.69	1.97	2.25
300	0.52	0.78	1.04	1.30	1.56	1.82	2.08
275	0.50	0.75	1.00	1.24	1.49	1.74	1.99
250	0.47	0.71	0.95	1.19	1.42	1.66	1.90
225	0.45	0.68	0.90	1.13	1.35	1.58	1.80
200	0.43	0.64	0.85	1.06	1.28	1.48	1.70
175	0.40	0.59	0.80	0.99	1.19	1.39	1.59
150	0.37	0.55	0.74	0.92	1.10	1.29	1.47

b. For PVC Pipe, maximum allowable leakage in gallons per hour per 50 joints of pipe:

	Nominal Pipe Diameter (IN)						
Avg. Test Pressure (psi)	4	6	8	10	12	14	16
300	0.47	0.70	0.94	1.17	1.40	1.64	1.87
275	0.45	0.67	0.90	1.12	1.34	1.57	1.79
250	0.43	0.64	0.85	1.07	1.28	1.50	1.71
225	0.41	0.61	0.81	1.01	1.22	1.42	1.62
200	0.38	0.57	0.76	0.96	1.15	1.34	1.53
175	0.36	0.54	0.72	0.89	1.07	1.25	1.43
150	0.33	0.50	0.66	0.83	0.99	1.16	1.32

5. If pipe under test contains sections of various diameters, the allowable leakage will be the sum of the computed leakage for each size.
6. If the leakage is greater than the maximum allowable, the Contractor shall at his own expense locate and repair the defective joints until leakage is within the specified allowances. No separate payment will be made for this item.

B. Tracer Wire Continuity:
1. Test all tracer wire in presence of representative of the City of Boerne.
2. Hook up locator transmitter to tracer wire and ensure that receiver gets strong signal continuously along the entire length of the pipe.
3. Repair any wires that do not carry signal sufficiently to provide strong locate signal for full length of the pipe.
4. Add tracer wire locate boxes if necessary to ensure strong signal for full length of pipe.

3.12 CLEANING AND DISINFECTING

A. Cleaning:
1. Clean interior of piping systems thoroughly before installing.
2. Maintain pipe in clean condition during installation.
3. Before jointing piping, thoroughly clean and wipe joint contact surfaces and then properly dress and make joint.
4. Immediately prior to pressure testing, clean and remove grease, metal cuttings, dirt, or other foreign materials which may have entered the system.
5. At completion of work and prior to Final Acceptance, thoroughly clean work installed under these Specifications. Clean equipment, fixtures, pipe, valves, and fittings of grease, metal cuttings, and sludge which may have accumulated by operation of system, from testing, or from other causes. Repair any stoppage or discoloration or other damage to parts of building, its finish, or furnishings, due to failure to properly clean piping system, without cost to Owner.

B. Disinfection:
1. After favorable performance of pressure test and prior to Final Acceptance, thoroughly flush entire piping system including supply, source and any appurtenant devices and perform disinfection as prescribed.
2. Perform work, including preventative measures during construction, in full compliance with AWWA C651.
3. Flush each segment of system to provide flushing velocity of not less than 2.5 FT per second.
4. Drain flushing water to location approved by the Owner.
5. Perform disinfection using one of the following forms:
   a. Application of chlorine gas-water mixture by means of solution-feed chlorinating device. Liquid chlorine shall comply with AWWA B301.

b. Application of calcium hypochlorite, or sodium hypochlorite. Chlorine compounds shall comply with AWWA B300.

6. Disinfect pipe with chlorinated water as per AWWA C651. Method of application of chlorine shall be by continuous feed method or slug method. During disinfection procedure, ensure that initial and residual chlorine concentrations meet AWWA C651 requirements by testing by an approved method as directed by the City of Boerne. Cost of testing shall be included in the Bid Unit Price for water mains and no separate payment will be made for this item.
7. Tag the system during the disinfection procedure.
8. Following disinfection for required contact period, neutralize chlorine residual in water by treating with reducing agent. (Refer to AWWA C651) Flush all treated water from pipeline at its extremities until replacement water is throughout pipe, upon test is proved comparable in quality to water in existing system. Take two samples to test for bacteriological quality as directed by City of Boerne. Repeat disinfection procedure until two satisfactory results are obtained. Quality of water delivered by the new water main to remain satisfactory for a minimum period of 7 days.
9. Secure and deliver to Owner, satisfactory bacteriological reports on samples taken from system. Ensure sampling and testing procedures are in full compliance to AWWA C651, the City of Boerne and applicable requirements of the Texas Commission on Environmental Quality. The City of Boerne may take the samples and have them tested at the Owner/Contractor's expense.
10. Filling and flushing shall be performed during periods of low usage, between the hours of midnight and 4:00 AM, unless otherwise approved in advance by City of Boerne Director of Public Works.
    a. Water used for filling and flushing will be provided by the City of Boerne for purchase by the Contractor at the City's commercial bulk water rates.
    b. Water shall be supplied through a jumper between existing water mains and new construction unless approved in advance by the City of Boerne Public Works Director.

END OF SECTION

SECTION 02670
RECLAIMED WATER MAIN CONSTRUCTION

PART 1 - GENERAL

1.1 SUMMARY

A. Section Includes:
   1. New reclaimed water mains and appurtenances.
   2. Coordination and interface with existing facilities and utilities.
   3. Connections to existing reclaimed water mains.
   4. Testing, flushing and disinfection.

B. Related Sections include but are not necessarily limited to:
   1. Division 0 - Bidding Requirements, Contract Forms, and Conditions of the Contract.
   2. Division 1 - General Requirements.
   3. Section 02110 - Site Clearing.
   4. Section 02221 - Trenching, Backfilling, and Compacting for Utilities.
   5. Section 02224 - Pipeline Undercrossings.
   6. Section 02260 - Topsoiling and Finished Grading.
   7. Section 03002 - Concrete.
   8. Section 09905 – Paint and Protective Coatings

1.2 QUALITY ASSURANCE

A. Referenced Standards:
   1. American National Standards Institute (ANSI):
      a. B16.5, Pipe Flanges and Flanged Fittings.
      b. B16.26, Cast Copper Alloy Fittings for Flared Copper Tubes.
      c. B18.2.1, Square, Hex, Heavy Hex, and Askew Head Bolts and Hex, Heavy Hex, Hex Flange, Lobed Head, and Lag Screws (Inch Series).
      d. B18.2.2, Square and Hex Nuts (Inch Series).
   2. American Society for Testing and Materials (ASTM):
      a. A47, Standard Specification for Ferritic Malleable Iron Castings.
      b. A48, Standard Specification for Gray Iron Castings.
      c. A126, Standard Specification for Gray Iron Castings for Valves, Flanges and Pipe Fittings.
      d. A269, Standard Specification for Seamless and Welded Austenitic Stainless Steel Tubing for General Service.
      e. A276, Standard Specification for Stainless Bars and Shapes.
      f. A436, Standard Specification for Austenitic Gray Iron Castings.
      g. A536, Standard Specification for Ductile Iron Castings.
      h. B62, Standard Specification for Composition Bronze or Ounce Metal Castings.
      i. B88, Standard Specification for Seamless Copper Water Tube.
      j. D2737, Standard Specification for Polyethylene (PE) Plastic Tubing.
      k. D2774, Standard Practice for Underground Installation of Thermoplastic Pressure Piping.
      l. F2164, Standard Practice for Field Leak Testing of Polyethylene (PE) and Crosslinked Polyethylene (PEX) Pressure Piping Systems Using Hydrostatic Pressure.
   3. American Water Work Association (AWWA):
      a. B300, Standard for Hypochlorites.
      b. B301, Standard for Liquid Chlorine.
      c. C104, Standard for Cement-Mortar Lining for Ductile-Iron Pipe and Fittings for Water.
      d. C105, Standard for Polyethylene Encasement for Ductile-Iron Pipe Systems.

e. C110, Standard for Ductile-Iron and Gray-Iron Fittings, 3 IN. through 48 IN. (76 mm through 1,219 mm), for Water.
f. C111, Standard for Rubber-Gasket Joints for Ductile-Iron Pressure Pipe and Fittings.
g. C151, Standard for Ductile-Iron Pipe, Centrifugally Cast, for Water.
h. C153, Standard for Ductile-Iron Compact Fittings for Water Service.
i. C500, Standard for Metal-Seated Gate Valves for Water Supply Service.
j. C502, Standard for Dry-Barrel Fire Hydrants.
k. C504, Standard for Rubber-Seated Butterfly Valves.
l. C508, Standard for Swing-Check Valves for Waterworks Service, 2 IN through 24 IN NPS.
m. C509, Standard for Resilient-Seated Gate Valves for Water Supply Service.
n. C510, Standard for Double Check Valve Backflow Prevention Assembly.
o. C511, Standard for Reduced-Pressure Principle Backflow Prevention Assembly.
p. C512, Standard for Air Release, Air/Vacuum, and Combination Air Valves for Waterworks Service.
q. C550, Standard for Protective Epoxy Interior Coatings for Valves and Hydrants.
r. C600, Standard for Installation of Ductile-Iron Water Mains and Their Appurtenances.
s. C605, Standard for Underground Installation of Polyvinyl Chloride (PVC) Pressure Pipe and Fittings for Water.
t. C606, Standard for Grooved and Shouldered Joints.
u. C651, Standard for Disinfecting Water Mains.
v. C800, Standard for Underground Service Line Valves and Fittings.
w. C900, Standard for Polyvinyl Chloride (PVC) Pressure Pipe and Fabricated Fittings, 4 IN through 12 IN (100mm through 300mm), for Water Distribution.
x. C905, Standard for Polyvinyl Chloride (PVC) Pressure Pipe and Fabricated Fittings, 14 IN through 48 IN (350mm through 1,200mm), for Water Transmission and Distribution.
y. C906, Standard for Polyethylene (PE) Pressure Pipe and Fittings, 4 In. (100 mm) Through 63 In. (1,600 mm), for Water Distribution and Transmission.
z. M17, Installation, Field Testing, and Maintenance of Fire Hydrants.

4. National Sanitation Foundation (NSF):
   a. Standard 14, Plastic Piping System Components and Related Materials.
   b. Standard 60, Drinking Water Treatment Chemicals – Health Effects.
   c. Standard 61, Drinking Water System Components – Health Effects.

B. Referenced Regulations:
   1. Texas Administrative Code (TAC)
      a. Title 30, Chapter 210, Use of Reclaimed Water.
      b. Title 30, Chapter 217, Design Criteria for Domestic Wastewater Systems.

1.3 DEFINITIONS

A. OS&Y: Outside Screw and Yoke.

B. NRS: Non-rising Stem.

C. RS: Rising Stem.

D. Purple: Color of materials to denote for use in reclaimed water service only, Pantone 522C.

1.4 SUBMITTALS

A. Shop Drawings:
   1. See Section 01340.
   2. Product technical data including:
      a. Acknowledgement that products submitted meet requirements of standards referenced.
      b. Manufacturer's installation instructions.
      c. Attach technical product data on gaskets, pipe, fittings, and other components.
      d. Valve pressure and temperature rating.
      e. Valve material of construction.

f. Special linings.
g. Valve dimensions and weight.
h. Valve flow coefficient.
i. Pipe lubricants

3. Fabrication and/or layout drawings.
4. Certifications.
   a. Qualifications of lab performing disinfection analysis on water systems.
5. Test reports.
   a. Copies of pressure test results on all piping systems.
   b. Reports defining results of dielectric testing and corrective action taken.
   c. Disinfection test report.
   d. Notification of time and date of piping pressure tests.

B. Submit results of the leakage tests, identifying the specific length of pipe tested, the test pressure, the duration of test and the amount of leakage.

C. Submit satisfactory bacteriological test reports on disinfection requirements.

D. Operation and Maintenance Manuals:
   1. See Section 01340.

PART 2 - PRODUCTS

2.1 PIPE

A. Pipe size: 4 through 12 IN.
   1. Buried Ductile Iron:
      a. Materials: Ductile iron, Class 200.
      b. Reference: AWWA C151.
      c. Lining: Cement Mortar: AWWA C104.
      d. Coating: Bituminous.
      e. Encasement: Polyethylene: AWWA C105, Purple in color for reclaimed water.
      f. Fittings: AWWA C110 ductile iron. Optional AWWA C153 ductile iron compact fittings for sizes 3 to 12 IN.
      g. Joints: Push-on joints with mechanical (stuffing box type) joints at fittings and valves: AWWA C111.
      h. Joint restraint:
         1) Push-on Joint: Split serrated restraint harness.
            a) Design: 350 psi.
            b) Material: Ductile Iron, ASTM A536, Grade 65-45-12.
            c) Bell Ring and Spigot Ring: Split serrated ring secured with clamping bolts to provide 360 degree contact with pipe. Serrations shall be bi-directional and designed to prevent point loading on pipe.
            d) Clamping bolts: ANSI B18.2/18.2.2, SAE Grade 5.
            e) T-Bolts, nuts, restraining rods: High strength, low alloy per AWWA C111.
         2) Mechanical Joint:
            a) As for Push-on Joint with retainer gland and gasket.
            b) Radial bolt type restrainer system
               (1) Gland: Ductile Iron, ASTM A536, Grade 65-45-12.
               (2) Wedge restrainers: Heat treated ductile iron, Brinnel hardness: 370.
               (3) T-Bolts and nuts: High strength, low alloy per AWWA C111.
               (4) Gasket: SBR per AWWA C111.
   2. Buried PVC:
      a. Materials: PVC, DR14.
      b. Reference: AWWA C900.
      c. Color: Purple for reclaimed water.

d. Lining: Cement mortar on fittings only: AWWA C104.
e. Coating: Bituminous on fittings only.
f. Encasement: Polyethylene on fittings only: AWWA C105.
g. Fittings: AWWA C110 ductile iron. Optional AWWA C153 ductile iron compact fittings for sizes 3 to 12 IN.
h. Joints: Push-on joints with mechanical (stuffing box type) joints at fittings and valves.
i. Joint restraint:
1) Push-on Joint: Split serrated restraint harness.
a) Design: 350 psi.
b) Material: Ductile Iron, ASTM A536, Grade 65-45-12.
c) Bell Ring and Spigot Ring: Split serrated ring secured with clamping bolts to provide 360 degree contact with pipe. Serrations shall be bi-directional and designed to prevent point loading on pipe.
d) Clamping bolts: ANSI B18.2.1/18.2.2, SAE Grade 5.
e) T-Bolts, nuts, restraining rods: High strength, low alloy per AWWA C111.
2) Mechanical Joint:
a) As for Push-on Joint with retainer gland and gasket.
b) Radial bolt type restrainer system
(1) Gland: Ductile Iron, ASTM A536, Grade 65-45-12.
(2) Wedge restrainers: Heat treated ductile iron, Brinnel hardness: 370.
(3) T-Bolts and nuts: High strength, low alloy per AWWA C111.
(4) Gasket: SBR per AWWA C111.

3. Buried PE:
a. Materials: Polyethylene, PE 4710, DR11.
b. Reference: AWWA C906.
c. Color: Purple for reclaimed water or black with two longitudinal purple stripes.
d. Fittings:
1) Polyethylene, AWWA C906.
2) Valves and transition couplings to other pipe materials: Mechanical (stuffing box type) with Butt Fused adapter that provides restraint in the joint.
3) Saddle Fusion fittings for branch outlets.
4) Electrofusion couplings.
e. Joints: Butt Fused.

4. Exposed:
a. Material: Ductile iron, Class 350 if flanged. If grooved type joint system, use pipe thickness per AWWA C606.
b. References: AWWA C115.
c. Lining: Cement mortar: AWWA C104.
d. Coating:
1) Paint: Section 09905.
2) Color: Purple.
e. Fittings: AWWA C110 ductile iron.
f. Joints: AWWA C115 flanged joints with flanges at valves and structure penetrations.

B. Pipe size: 14 through 48 IN.
1. Buried Ductile Iron.
a. Materials: Ductile iron, Class 200.
b. Reference: AWWA C151.
c. Lining: Cement Mortar: AWWA C104.
d. Coating: Bituminous.
e. Encasement: Purple polyethylene: AWWA C105.
f. Fittings: AWWA C110 ductile iron.
g. Joints: Push-on joints with mechanical (stuffing box type) joints at fittings and valves: AWWA C111.
h. Joint restraint:
1) Push-on Joint: Split serrated restraint harness.

a) Design: 350 psi.
b) Material: Ductile Iron, ASTM A536, Grade 65-45-12.
c) Bell Ring and Spigot Ring: Split serrated ring secured with clamping bolts to provide 360 degree contact with pipe. Serrations shall be bi-directional and designed to prevent point loading on pipe.
d) Clamping bolts: ANSI B18.2.1/18.2.2, SAE Grade 5.
e) T-Bolts, nuts, restraining rods: High strength, low alloy per AWWA C111.

2) Mechanical Joint:
a) As for Push-on Joint with retainer gland and gasket.
b) Radial bolt type restrainer system
(1) Gland: Ductile Iron, ASTM A536, Grade 65-45-12.
(2) Wedge restrainers: Heat treated ductile iron, Brinnel hardness: 370.
(3) T-Bolts and nuts: High strength, low alloy per AWWA C111.
(4) Gasket: SBR per AWWA C111.

2. Buried PVC:
a. Materials: PVC, DR18.
b. Reference: AWWA C905.
c. Color: Purple for reclaimed water.
d. Lining: Cement mortar on fittings only: AWWA C104.
e. Coating: Bituminous on fittings only.
f. Encasement: Purple polyethylene on fittings only: AWWA C105.
g. Fittings: AWWA C110 ductile iron.
h. Joints: Push-on joints with mechanical (stuffing box type) joints at fittings and valves.
i. Joint restraint:
1) Push-on Joint: Split serrated restraint harness.
a) Design: 350 psi.
b) Material: Ductile Iron, ASTM A536, Grade 65-45-12.
c) Bell Ring and Spigot Ring: Split serrated ring secured with clamping bolts to provide 360 degree contact with pipe. Serrations shall be bi-directional and designed to prevent point loading on pipe.
d) Clamping bolts: ANSI B18.2.1/18.2.2, SAE Grade 5.
e) T-Bolts, nuts, restraining rods: High strength, low alloy per AWWA C111.
2) Mechanical Joint:
a) As for Push-on Joint with retainer gland and gasket.
b) Radial bolt type restrainer system
(1) Gland: Ductile Iron, ASTM A536, Grade 65-45-12.
(2) Wedge restrainers: Heat treated ductile iron, Brinnel hardness: 370.
(3) T-Bolts and nuts: High strength, low alloy per AWWA C111.
(4) Gasket: SBR per AWWA C111.

3. Buried PE:
a. Materials: Polyethylene, PE 4710, DR 11.
b. Reference: AWWA C906.
c. Color: Purple for reclaimed water or black with two longitudinal purple stripes.
d. Fittings: Polyethylene, AWWA C906.
e. Joints:
1) Butt Fused.
2) Mechanical (stuffing box type) at valves with Butt Fused adapter that provides restraint in the joint.
3) Saddle Fusion for branch outlets.
4) Electrofusion couplings.

4. Exposed:
a. Material: Ductile iron, Class 200 if flanged. If grooved type joint system, use pipe thickness per AWWA C606.
b. References: AWWA C115.
c. Lining: Cement mortar: AWWA C104.

d. Coating: Paint Section 09905, Purple.
e. Fittings: Either AWWA C110 ductile or gray iron.
f. Joints: AWWA C115 flanged joints with flanges at valves and structure penetrations.

C. Service Line:
1. Sizes ¾ through 2 IN:
a. HDPE Plastic Tubing:
1) ASTM D2737, PE4710, CTS.
2) SDR 9.
3) Color: Purple for reclaimed water service.
b. Fittings: ANSI B16.26; wrought-copper, compression type.
c. Stiffener inserts: Stainless steel tubing, ASTM A269 Type 304.
2. Sizes greater than 2 IN: Pipe as specified above.

2.2 VALVES

A. Resilient Seat Gate Valves, 4 to 12 IN DIA:
1. Comply with AWWA C509.
2. Materials:
a. Stem and stem nut - bronze.
1) Wetted bronze parts in low zinc bronze.
2) Aluminum bronze components: heat treated per AWWA C504.
b. Body, gate: ductile iron, ASTM A536, Grade 65-45-12.
c. Resilient seat: Styrene Butadiene Rubber (SBR).
3. Design requirements:
a. 200 psi working pressure.
b. Buried - NRS O-ring stem seal.
c. Exposed - NRS, O-ring, stem seal, hand wheel, with open/close indicator.
d. Clockwise open rotation.
4. Fusion bonded epoxy coating interior and exterior except stainless steel and bearing surfaces.
a. Comply with AWWA C550.
1) Wetted bronze parts in low zinc bronze.
2) Aluminum bronze components: heat treated per AWWA C504.
b. Exterior coating: Purple.
5. Acceptable Manufacturers:
a. Mueller.
b. Clow.

B. Butterfly valves, greater than 14 IN DIA:
1. Comply with AWWA C504.
2. Materials:
a. Valve bodies:
1) ASTM A126, Class B or ASTM A536 Grade 65-45-12 ductile iron.
2) Wafer valves may be constructed of ASTM A48, Class 40 cast iron.
3) Exterior coating: Purple fusion bonded epoxy.
b. Valve shafts:
1) Stainless steel, 18-8, Type 304 or 316.
c. Valve discs:
1) ASTM A48, Class 40 cast iron. or
2) ASTM A536, Grade 65-45-12 ductile iron. or
3) ASTM A436, Type 1 alloy cast iron. or
4) Bronze in accordance with AWWA C504.
d. Valve seats:
1) Natural rubber.
e. Mating surfaces:
1) Valves less than 30 IN: ASTM A276, 18-8, stainless steel or bronze.

2) Valves 30 IN and larger: ASTM A276, 18-8, stainless steel.

3. Design Requirements:
   a. Seat type: Resilient. Comply with AWWA C504.
   b. Exposed and submerged valves 14 through 20 IN.
      1) Body type: Wafer or short body flange (laying length may vary from AWWA C504).
      2) Equip wafer type with fully tapped anchor lugs drilled per ANSI B16.5.
   c. Exposed and submerged valves 24 IN and larger:
      1) Body type: Short body flange.
      2) Working pressure: Rated for 150 psi (Class 150B per AWWA C504).
   d. Direct buried valves:
      1) Body type: Short body flange.
      2) Working pressure: Rated for 150 psi (Class 150B per AWWA C504).
4. Acceptable Manufacturers:
   a. Mueller.
   b. Clow.

C. Buried Valve Actuators:
1. Provide screw or slide type adjustable, two-piece cast iron valve box of sufficient height to reach grade without the use of additional extensions, 5 IN minimum diameter, 3/16 IN minimum thickness, and identifying cast iron cover.
2. Box base to enclose buried valve gear box or bonnet.
3. Provide 2 IN standard actuator nuts complying with Section 3.16 of AWWA C500.
4. Provide at least two tee-handle keys for actuator nuts, with 5 FT extension between key and handle.
5. Extension Stem:
   a. Provide for buried valves greater than 4 FT below finish grade.
   b. Extend to within 6 IN of finish grade.
6. Provide concrete pad encasement of valve box as shown for all buried valves.

D. Exposed Valve Manual Actuators:
1. Provide for all exposed valves not having electric or cylinder actuators.
2. Provide handwheels for gate and globe valves.
   a. Size handwheels for valves in accordance with AWWA C500.
3. Provide lever actuators for plug valves, butterfly valves and ball valves 6 IN DIA and smaller.
   a. Lever actuators for butterfly valves shall have a minimum of 5 intermediate lock positions between full open and full close.
   b. Provide at least two levers for each type and size of valve furnished.
4. Gear actuators required for plug valves, butterfly valves, and ball valves 8 IN DIA and larger.
5. Gear actuators to be totally enclosed, permanently lubricated and with sealed bearings.
6. Provide chain actuators for valves 6 FT or higher from finish floor to valve centerline.
   a. Cadmium-plated chain looped to within 3 FT of finish floor.
   b. Equip chain wheels with chain guides to permit rapid operation with reasonable side pull without "gagging" the wheel.
7. Provide cast iron floor stands where shown on Drawings. Stands to be furnished by valve manufacturer with actuator.
   a. Stand or actuator to include thrust bearings for valve operation and weight of accessories.
8. Color: purple.

E. Swing Check Valve:
1. Comply with AWWA C508.
2. Acceptable manufacturers:
   a. Mueller.
   b. Clow.

c. Or approved equal.

3. Materials:
   a. Body and cover: Cast iron.
   b. Seat ring, hinge: Bronze.
   c. Disc:
      1) 3 to 4 IN: Bronze.
      2) 6 to 24 IN: Cast iron with rubber face.
   d. Hinge shaft: Stainless steel.
   e. Bearings, connecting hardware: Bronze.
4. Design requirements:
   a. 175 psi working pressure (3 to 12 IN).
   b. 150 psi working pressure (14 to 24 IN).
   c. Furnish with outside weight and lever or lever and spring.
5. Color: purple.

F. Air Release Valve:
1. Comply with AWWA C512.
2. Acceptable manufacturers:
   a. APCO 200A, 1 IN inlet.
   b. GA Industries, Figure 920, 1 IN inlet.
   c. Or approved equal.
3. Materials:
   a. Body and cover: Cast iron or semi-steel.
   b. Float: Stainless steel.
   c. Linkage and trim: Bronze or stainless steel.
4. Design requirements:
   a. Working pressure: 150 psi.
   b. Release Min. 5 cfm at 10 psi differential pressure.
5. Accessories:
   a. Curb valve:
      1) 1 IN Mueller B-25209.
      2) 1/4 turn.
      3) Mueller 110 CCC both ends.
   b. Vault: Cast iron meter box with heavy duty lid, painted purple.
   c. Water Piping: Copper Tubing, ASTM B88, Type K, annealed.
   d. Air Piping: Schedule 80 PVC, ASTM D1785.
6. Color: purple.

G. Combination Air Release Valves:
1. Comply with AWWA C512.
2. Acceptable manufacturers:
   a. GA Industries, Figure 980.
   b. APCO Series 1700.
   c. Or approved equal.
3. Materials:
   a. Body and cover: Cast iron.
   b. Float, linkage and hardware: Stainless steel.
   c. Seat: Buna-N.
4. Design requirements:
   a. Working pressure: 150 psi.
   b. Unit may be combined in one valve body or be duplex type.
   c. Provide surge check unit.
   d. Provide butterfly isolation valve.
5. Color: purple.

2.3 END OF MAIN BLOWOFF

A. Provide reaction block and flush type fire hydrant for end of main blowoff.

B. Flush type fire hydrant:
   a. 2-1/8 IN Flush type fire hydrant
   b. AWWA C502.
   c. One 2-1/2 IN hose nozzle.
   d. 150 PSI working pressure.
   e. 300 PSI test pressure.
   f. Dry barrel design.
   g. Compression type main valve.
   h. Cast iron flush box with non-locking lid.
   i. Pentagon operating nut.
   j. Field replaceable hose nozzle.
   k. Dual bronze drain valves.
   l. Mueller A-412 or approved equal.
   m. Paint: field applied purple per Section 09905 all exposed parts within box.

2.4 ACCESSORIES

A. Underground warning tape:
   1. Material: Polyethylene with metallic core.
   2. Thickness: 3.5 mils.
   3. Tensile strength: 1750 psi.
   4. Size: 6 IN wide (minimum).
   5. Legend: Preprinted continuously.
      a. "CAUTION – RECLAIMED WATER LINE BURIED BELOW"
      b. Black lettering on purple background.

B. Tapping Sleeve and Tapping Valve: Use sleeve and valve compatible with tapping machine.
   1. Tapping Sleeve: Stainless Steel, 2-piece bolted sleeve with flanged outlet for new branch connection.
   2. Ends: mechanical-joint with rubber gaskets or sealing rings in sleeve body.
   3. Tapping Valve: Resilient Seat Gate Valve per 2.2.A. with MJ end and flanged end to match tapping sleeve.
   4. Color: purple.

C. Service Saddles for services through 2 IN:
   1. PVC Main:
      a. James Jones J969 or equal.
      b. Bronze body with double Stainless Steel straps and stainless steel nuts.
      c. Buna-N O-ring gasket.
      d. Outlet:
         1) ¾ IN to 1 IN: AWWA C800 taper thread for corporation stop.
         2) 1 ½ IN to 2 IN: AWWA C800 IP thread for corporation stop.
   2. Ductile Iron Main:
      a. James Jones J979 or equal.
      b. Bronze body with double silicone bronze straps and bronze nuts.
      c. Buna-N O-ring gasket.
      d. Outlet:
         1) ¾ IN to 1 IN: AWWA C800 taper thread for corporation stop.
         2) 1 ½ IN to 2 IN: AWWA C800 IP thread for corporation stop.

D. Corporation Stops:
   1. Field paint purple per Section 09905.
   2. ¾ IN to 1 IN:
      a. Mueller B-25008.
      b. ASTM B62 Brass body.
      c. Mueller 300 ball valve.

d. Inlet: AWWA C800 taper thread.
e. Outlet: Mueller 110 compression outlet for CTS OD tubing.

3. 1 ½ IN to 2 IN:
   a. Mueller B-25028.
   b. ASTM B62 Brass body.
   c. Mueller 300 ball valve.
   d. Inlet: AWWA C800 IP thread.
   e. Outlet: Mueller 110 compression for CTS OD tubing.

E. Curb Stops:
1. Field paint purple per Section 09905.
2. ¾ IN to 1 IN:
   a. Mueller B-24350.
   b. ASTM B62 Brass body.
   c. Mueller 300 ball valve.
   d. Wide tee head with lock wing.
   e. Inlet: Mueller 110 compression for CTS OD tubing.
   f. Outlet: Meter swivel nut..
3. 1 ½ IN to 2 IN:
   a. Mueller B-24335.
   b. ASTM B62 Brass body.
   c. Mueller 300 ball valve.
   d. Wide tee head with lock wing.
   e. Inlet: Mueller 110 compression for CTS OD tubing.
   f. Outlet: Two bolt meter flange.

F. Angle Stops:
1. Field paint purple per Section 09905.
2. ¾ IN to 1 IN:
   a. Mueller B-24258.
   b. ASTM B62 Brass body.
   c. Mueller 300 ball valve.
   d. Wide tee head with lock wing.
   e. Inlet: Mueller 110 compression for CTS OD tubing.
   f. Outlet: Meter swivel nut..
3. 1 ½ IN to 2 IN:
   a. Mueller B-24276.
   b. ASTM B62 Brass body.
   c. Mueller 300 ball valve.
   d. Wide tee head with lock wing.
   e. Inlet: Mueller 110 compression for CTS OD tubing.
   f. Outlet: Two bolt meter flange.

G. Service Fittings:
1. Field paint purple per Section 09905.
2. Unions, couplings, bends, tees, wyes and U-branch connections.
3. Cast Bronze, ASTM B62.
4. Mueller 110 compression connections for CTS tubing or equal.

H. Water Meter Boxes:
1. ¾ IN to 1 IN Service:
   a. Manufacturer: DFW Plastics, Inc.
      1) Body: DFW36C.
      2) Lid: DFW36C-RKSBSMTR.
         a) Color: Purple.
   b. Or approved equal.
2. 1 ½ IN to 2 IN Service:

a. Manufacturer: DFW Plastics, Inc.
   1) Body: D1730C-18.
   2) Lid: D1730C-KSBSM
      a) Color: Purple.
b. Or approved equal.

I. Valve Boxes:
   1. Valves to 12 IN: Two-piece screw type.
   2. Valves greater than 12 IN: Three-piece screw type.
   3. 5 ¼ IN diameter shaft.
   4. Gray iron casting.
   5. Lid
      a. Locking type.
      b. Gray iron casting.
      c. Legend: “REUSE”, “RECLAIMED”, or “NPW”.
      d. Color: Purple

J. Pipe Couplings: Iron-body sleeve assembly, fabricated to match OD of pipes to be joined.
   1. Sleeve: ASTM A 126, Class B, gray iron.
   2. Followers: ASTM A47, malleable iron; or ASTM A536, ductile iron.
   3. Gaskets: Rubber.
   4. Bolts and Nuts: AWWA C111.
   5. Finish: Purple enamel paint.

K. Tracer Wire
   1. Insulation rated for 600V.
   2. 12 AWG solid copper conductor.
   3. UL 83 for THHN/THWN and THHN/THWN-2 insulation.
   4. UL listed for direct burial.
   5. Jacket:
      a. Purple.
      b. Nylon.
      c. Heat, oil and gasoline resistant.
   6. Split bolt connector for splice:
      a. Bolt and nut: Bronze alloy.
      b. Copper pressure bar.
      c. Size for 2, 12 AWG solid copper conductors.
      d. Insulate with a minimum of 2 layers of plastic electrical tape.

L. Tracer Wire Locate Boxes
   1. Rim and lid:
      a. Cast iron or ductile iron.
      b. Standard pentagon head lock bolt.
      c. Nickel plated brass terminal(s) for tracer wire connection.
      d. Lettering on top of cover: “REUSE LOCATE” or “NPW LOCATE”
      e. Top color: Purple.
   2. Body:
      a. 2 1/2 IN DIA ABS plastic tube.
      b. Length to fit to depth of tracer wire.
      c. Magnet embedded in tube wall.

PART 3 - EXECUTION

3.1 INSTALLATION, GENERAL

A. Install products in accordance with manufacturer's instructions.

B. Mark all pipe and appurtenances of the reclaimed water system with purple paint or tape, unless otherwise colored purple. See Section 09905 for painting and coating requirements.

C. Install Ductile Iron reclaimed water mains in accordance with AWWA C600

D. Install PVC reclaimed water mains in accordance with AWWA C605.

E. Install PE reclaimed water mains in accordance with ASTM D2774.

F. Comply with applicable provisions of 30 TAC 210 and 30 TAC 217.

G. Install reclaimed water main to the line and grade on the Drawings. Stake reclaimed water mains at a minimum 100 FT interval with depth of cuts monitored.

H. Field verify depth of utilities that will be crossed.
   1. Adjust reclaimed water main elevation as required during construction.
   2. No separate payment will be made for field verification or adjustment of main depths as required.

I. Restore all existing structures or services damaged by Contractor's operations at no cost to Owner.

3.2 BURIED INSTALLATION

A. Unless otherwise shown on the Drawings, provide a minimum of 4 FT and maximum of 6 FT earth cover over reclaimed water mains.

B. Enter and exit through structure walls, floors, and ceilings by using penetrations and seals specified in Section 01800 and as shown on Drawings.

C. When entering or leaving structures with buried mechanical joint piping, install joint within 2 FT of point where pipe enters or leaves structure. Install second joint not more than 6 FT nor less than 4 FT from first joint.

D. Install expansion devices as necessary to allow expansion and contraction movement.

E. Laying Pipe In Trench:
   1. Excavate and backfill trench in accordance with Section 02221.
   2. Clean each pipe length thoroughly and inspect for compliance to Specifications.
   3. Grade trench bottom and excavate for pipe bell and lay pipe on trench bottom.
   4. Install gasket or joint material according to manufacturer's directions after joints have been thoroughly cleaned and examined.
   5. Except for first two joints, before making final connections of joints, install two full sections of pipe with earth tamped along side of pipe or final with bedding material placed.
   6. Lay pipe in only suitable weather with good trench conditions. Never lay pipe in water except where approved by Engineer.
   7. Seal open end of line with watertight plug if pipe laying stopped.
   8. Remove water in trench before removal of plug.

F. Lining Up Push-On Joint Piping:
   1. Lay piping on route lines shown on Drawings.
   2. Deflect from straight alignments or grades by vertical or horizontal curves or offsets.
   3. Observe maximum deflection values stated in manufacturer's written literature.
   4. Provide special bends when specified or where required alignment exceeds allowable deflections stipulated.
   5. Install shorter lengths of pipe in such length and number that angular deflection of any joint, as represented by specified maximum deflection, is not exceeded.

G. Anchorage and Blocking:
   1. Provide reaction blocking, anchors, joint harnesses, or other acceptable means for preventing movement of piping caused by forces in or on buried piping tees, wye branches, plugs, or bends.

2. Place concrete blocking so that it extends from fitting into solid undisturbed earth wall. Concrete blocks shall not cover pipe joints.
3. Provide bearing area of concrete in accordance with drawing detail.

H. Install underground hazard warning tape 12 IN below finished grade in unpaved areas and 6 IN below subgrade in paved areas.

I. Install insulating components where dissimilar metals are joined together.

J. Install tracer wires continuously within one inch above top of pipe, or tape to top of pipe.

K. Tracer wire locate boxes:
1. Install at locations indicated on plans, or at intervals not more than 500 FT apart.
2. Install top of box flush with pavement and 1 IN above grade in unpaved areas.
3. Install concrete pad around top of box.
4. Bring tracer wire up in box and provide sufficient length to bring wire ends to a minimum of 2 FT above final grade.
5. Connect tracer wire to terminals on lid and coil slack in box.

3.3 EXPOSED PIPING INSTALLATION

A. Install piping in vertical and horizontal alignment as shown on Drawings.

B. Install grooved joint piping in accordance with AWWA C606.

C. Enter and exit through structure walls, floor and ceilings using penetrations and seals specified in Section 01800 and as shown on the Drawings.

D. Install vertical piping runs plumb and horizontal piping runs parallel with structure walls.

E. Pipe Support:
1. Use methods of piping support as shown on Drawings.
2. Size pipe supports with consideration to specific gravity of liquid being piped.
3. Install supports at valves, tees, bends and equipment connections to prevent pipe loads from being transferred to equipment, fittings, and valves.

F. Locate and size sleeves and castings required for piping system. Arrange for chases, recesses, inserts or anchors at proper elevation and location.

G. Use reducing fittings throughout piping systems. Bushings will not be allowed unless specifically approved.

H. Equipment Drainage and Miscellaneous Piping:
1. Provide drip pans and piping at equipment where condensation may occur.
2. Hard pipe stuffing box leakage to nearest floor drain.
3. Avoid piping over electrical components such as motor control centers, panelboards, etc.
   a. If piping must be so routed, utilize 16 GA, 316 stainless steel drip pan under piping and over full length of electrical equipment.
   b. Hard pipe drainage to nearest floor drain.
4. Collect system condensate at drip pockets, traps and blowoff valves.
5. Provide drainage for process piping at locations shown on Drawings in accordance with Drawing details.

I. Unions:
1. Install in position which will permit valve or equipment to be removed without dismantling adjacent piping.
2. Mechanical type couplings may serve as unions.
3. Additional flange unions are not required at flanged connections.

J. Install expansion devices as necessary to allow expansion/contraction movement.

K. Provide full face gaskets on all systems.

L. Anchorage and Blocking:
   1. Block, anchor, or harness exposed piping subjected to forces in which joints are installed to prevent separation of joints and transmission of stress into equipment or structural components not designed to resist those stresses.

M. Equipment Pipe Connections:
   1. Equipment - General:
      a. Exercise care in bolting flanged joints so that there is no restraint on the opposite end of pipe or fitting which would prevent uniform gasket pressure at connection or would cause unnecessary stresses to be transmitted to equipment flanges.
      b. Where push-on joints are used in conjunction with flanged joints, final positioning of push-on joints shall not be made until flange joints have been tightened without strain.
      c. Tighten flange bolts at uniform rate which will result in uniform gasket compression over entire area of joint. Provide tightening torque in accordance with manufacturer's recommendations.
      d. Support and match flange faces to uniform contact over their entire face area prior to installation of any bolt between the piping flange and equipment connecting flange.
      e. Permit piping connected to equipment to freely move in directions parallel to longitudinal centerline when and while bolts in connection flange are tightened.
      f. Align, level, and wedge equipment into place during fitting and alignment of connecting piping.
      g. Grout equipment into place prior to final bolting of piping but not before initial fitting and alignment.
      h. To provide maximum flexibility and ease of alignment, assemble connecting piping with gaskets in place and minimum of four bolts per joint installed and tightened. Test alignment by loosening flange bolts to see if there is any change in relationship of piping flange with equipment connecting flange. Realign as necessary, install flange bolts and make equipment connection.
      i. Provide utility connections to equipment shown on Drawings, scheduled or specified.

N. Provide insulating components where dissimilar metals are joined together.

3.4 VALVE INSTALLATION

A. Install products in accordance with manufacturer's instructions.

B. Painting Requirements:
   1. Comply with Section 09905 for painting and protective coatings.

C. Setting Buried Valves:
   1. Locate valves installed in pipe trenches where buried pipe indicated on Drawings.
   2. Set valves and valve boxes plumb.
   3. Place valve boxes directly over valves with top of box being brought to surface of finished grade.
   4. Install in closed position.
   5. Place valve on firm footing in trench to prevent settling and excessive strain on connection to pipe.
   6. After installation, backfill up to top of box for a minimum distance of 4 FT on each side of box.

D. Support exposed valves and piping adjacent to valves independently to eliminate pipe loads being transferred to valve and valve loads being transferred to the piping.

E. Do not install gate valves inverted or with the stems sloped more than 45 degrees from the upright unless the valve was ordered and manufactured specifically for this orientation.

F. For threaded valves, provide union on one side within 2 FT of valve to allow valve removal.

G. Install valves accessible for operation, inspection, and maintenance.

3.5 INTERRUPTION OF SERVICE

A. No interruption of service is allowed unless approved in advance by the City of Boerne.

B. Submit a written request for an interruption of service to the City of Boerne a minimum of 30 days in advance of scheduled interruption. Requests must include:
   1. Reason for interruption.
   2. An evaluation of alternatives that do not require interruption of service.
   3. Construction plans applicable to the interruption of service.
   4. List of measures that will be taken to minimize the length of the interruption.
   5. The number of customers affected.
   6. The hours of the interruption.
   7. List of measures that will be taken to reduce the inconvenience to customers.

C. The City of Boerne will only approve requests for interruption of service that are deemed necessary and minimize the inconvenience to customers, the duration of the interruption, and the number of customers affected. Requests will not be approved if feasible alternatives to service interruption are available.

D. If approved, The City of Boerne will notify water customers of the interruption of service.

3.6 UNDERGROUND SERVICES

A. Notify utility representative prior to construction to obtain available information on location of existing utilities. The Contractor shall be responsible for locating all utilities.

B. Connect existing water services to the new water mains following acceptance of new water main by City of Boerne. Repair damage to existing water service using copper pipe and union the same size as existing service.

3.7 PROTECTION OF EXISTING UTILITIES

A. Verify the location of all underground utilities. Omission from, or the inclusion of utility locations on the plans is not to be considered as the nonexistence of or a definite location of existing underground utilities.

B. Notify a representative of the underground utilities 24 HRS in advance of crossings.

3.8 CONNECTIONS TO EXISTING WATER MAINS

A. Obtain approval from the City of Boerne Director of Public Works prior to making any connections to existing water mains.

B. Make connections to existing water mains as shown on Drawings, by attaching to existing or changed fitting. Cost for making connections shall include cost of all fittings including flexible couplings, and shall be included in the bid unit price of the water main.

C. Where the connection is made to an existing water main which can be adequately isolated from the distribution system, it shall be termed a "dry connection."

D. Contractor is responsible for controlling and disposing of water in the trench at no additional cost to the Owner.

3.9 RECLAIMED WATER MAINS IN THE VICINITY OF POTABLE WATER MAINS

A. Comply with the provisions of 30 TAC 217.69.

B. Do not construct reclaimed water mains parallel to water mains with less than 4 FT of clear horizontal separation between the pipes.

C. When crossing potable water mains and potable water services:
   1. Center a joint of reclaimed water pipe on the crossing with the potable water pipe.

2. Install the reclaimed water main below the potable water pipe with a minimum clearance of 6 IN.
3. Embed the reclaimed water main within 4 FT of the potable water pipe in cement stabilized sand.

D. Payment for crossings shall be included in the bid unit price of the reclaimed water main.

3.10 FIELD QUALITY CONTROL

A. Hydrostatic Testing:
1. Hydrostatically test all valves, hydrants, pipe and fittings.
   a. Ductile Iron Pipe: AWWA C600.
   b. PVC Pipe: AWWA C605.
   c. PE Pipe: ASTM F2164.
2. Test Pressure:
   a. Minimum 1.25 times the normal working pressure at the highest point in the system.
   b. Minimum 1.50 times the normal working pressure at the test point.
   c. Minimum 150 psi.
3. Furnish all necessary apparatus to run hydrostatic test, including necessary taps into the pipe. Prior to pressure testing, expel air from the pipe. Install corporation cocks at all high points in water main to allow air to be expelled. After pipe has been laid and backfilled, slowly fill each valved section of pipe with water and apply a test pressure of 150 psi. After air has been expelled, close corporation cocks and apply test pressure. The duration of each hydrostatic test to be a minimum of 2 HRS.
4. Measure leakage from water main while test pressure is applied. Leakage is defined as the quantity of water that must be supplied into the pipe to maintain the specified leakage test pressure within 5 psi of the initial test pressure. No pipe installation will be accepted if leakage is greater than the following:
   a. For Ductile Iron Pipe, maximum allowable leakage in gallons per hour per 1,000 feet of pipe:

	Nominal Pipe Diameter (IN)						
Avg. Test Pressure (psi)	4	6	8	10	12	14	16
450	0.64	0.95	1.27	1.59	1.91	2.23	2.55
400	0.60	0.90	1.20	1.50	1.80	2.10	2.40
350	0.56	0.84	1.12	1.40	1.69	1.97	2.25
300	0.52	0.78	1.04	1.30	1.56	1.82	2.08
275	0.50	0.75	1.00	1.24	1.49	1.74	1.99
250	0.47	0.71	0.95	1.19	1.42	1.66	1.90
225	0.45	0.68	0.90	1.13	1.35	1.58	1.80
200	0.43	0.64	0.85	1.06	1.28	1.48	1.70
175	0.40	0.59	0.80	0.99	1.19	1.39	1.59
150	0.37	0.55	0.74	0.92	1.10	1.29	1.47

b. For PVC Pipe, maximum allowable leakage in gallons per hour per 50 joints of pipe:

	Nominal Pipe Diameter (IN)						
Avg. Test Pressure (psi)	4	6	8	10	12	14	16
300	0.47	0.70	0.94	1.17	1.40	1.64	1.87
275	0.45	0.67	0.90	1.12	1.34	1.57	1.79
250	0.43	0.64	0.85	1.07	1.28	1.50	1.71
225	0.41	0.61	0.81	1.01	1.22	1.42	1.62
200	0.38	0.57	0.76	0.96	1.15	1.34	1.53
175	0.36	0.54	0.72	0.89	1.07	1.25	1.43
150	0.33	0.50	0.66	0.83	0.99	1.16	1.32

c. For PE Pipe, there shall be no leakage.
   1) PE pipe passes if there is no loss in pressure after 2 HR.
   2) If any leakage is identified, relieve pressure from pipe and repair leak.
   3) PE pipe may be tested against blind flanges or fused caps instead of closed valves is valves may be damaged or cause leakage during testing.

d. If pipe under test contains sections of various diameters, the allowable leakage will be the sum of the computed leakage for each size.

e. If the leakage is greater than the maximum allowable, the Contractor shall locate and repair the defective joints until leakage is within the specified allowances. No separate payment will be made for this item.

B. Tracer Wire Test:
   1. Test all tracer wire in presence of representative of the City of Boerne.
   2. Hook up locator transmitter to tracer wire and ensure that receiver gets strong signal continuously along full length of pipe.
   3. Repair any wires that do not carry signal sufficiently to provide strong locate signal at any point along the pipe line.
   4. Add tracer wire locate boxes if necessary to ensure a strong locate signal along the full length of the pipe.

C. Cross connection test:
   1. Verfiy that all reclaimed water services are connected to the reclaimed water system and not to the potable water system. Verify in the presence of the City of Boerne.
      a. Pressurize the reclaimed water system.
      b. Ensure that potable water system is not pressurized.
      c. Open each curb stop for each reclaimed water service and verify that water flows from the service.
      d. Open each curb stop for each potable water service and verify that no water flows from the service.
      e. Each verified reclaimed water service will be locked in an off position by the City of Boerne.
   2. Verify that all potable water services are connected to the potable water system and not to the reclaimed water system. Verify in the presence of the City of Boerne.
      a. Depressurize the reclaimed water system.
      b. Pressurize the potable water system.
      c. Open each curb stop for each potable water service and verify that water flows from the service.
      d. Each verified potable water service will be locked in an off position by the City of Boerne.
   3. Identify all services that did not pass the cross connection test and were not locked off. Correct cross connection and retest each service until all services have been verified and locked in the off position by the City of Boerne.

3.11 CLEANING AND DISINFECTING

A. Cleaning:
   1. Clean interior of piping systems thoroughly before installing.
   2. Maintain pipe in clean condition during installation.
   3. Before jointing piping, thoroughly clean and wipe joint contact surfaces and then properly dress and make joint.
   4. Immediately prior to pressure testing, clean and remove grease, metal cuttings, dirt, or other foreign materials which may have entered the system. Flush reclaimed water mains to completely clear of debris.
   5. At completion of work and prior to Final Acceptance, thoroughly clean work installed under these Specifications. Clean equipment, fixtures, pipe, valves, and fittings of grease, metal cuttings, and sludge which may have accumulated by operation of system, from testing, or from other causes. Repair any stoppage or discoloration or other damage to parts of building, its finish, or furnishings, due to failure to properly clean piping system, without cost to Owner.
   6. Filling and flushing shall be performed during periods of low usage as approved in advance by City of Boerne. Water used for filling and flushing will be provided by the City of Boerne for purchase by the Contractor at the City's commercial bulk water rates.

END OF SECTION

SECTION 02930
SEEDING, SODDING AND LANDSCAPING

PART 1 - GENERAL

1.1 SUMMARY

A. Section Includes:
   1. Seeding, sodding and landscape planting:
      a. Soil preparation.
      b. Native grass seeding.
      c. Sodding.

B. Related Sections include but are not necessarily limited to:
   1. Division 0 - Bidding Requirements, Contract Forms, and Conditions of the Contract.
   2. Division 1 - General Requirements.
   3. Section 02260 - Topsoiling and Finished Grading.

1.2 QUALITY ASSURANCE

A. Referenced Standards:
   1. American Society for Testing and Materials (ASTM):
      a. D977, Standard Specification for Emulsified Asphalt.
      b. D2028, Standard Specification for Cutback Asphalt.
   2. Texas Department of Transportation (TxDOT) Standard Specifications for Construction and Maintenance of Highways, Streets, and Bridges:
      a. Item 164 Seeding for Erosion Control.
   3. United States Department of Agriculture, (USDA):
      a. Federal Seed Act.

1.3 SUBMITTALS

A. Shop Drawings:
   1. See Section 01340.
   2. Layout drawings:
      a. Scaled site plan (scale 1 IN = 20 FT or equal to scale of Project site plan drawing) on reproducible drawing to show:
         1) Tree, plant and planting location.
         2) Structures, sidewalks, pavement, and fences.
         3) Limits of seeded, sodded, and mulched areas.
         4) Locate items by drawing coordinates or grid system. Provide details of tree and plant anchorage. Include quantity takeoff with species types, numbers, sizes and special instructions. Ensure Drawings are sealed by a registered Landscape Architect and submitted through qualified nursery.
   3. Product technical data including:
      a. Acknowledgement that products submitted meet requirements of standards referenced.
      b. Manufacturer's installation instructions.
      c. Signed copies of vendor's statement for seed mixture required, stating botanical and common name, place of origin, strain, percentage of purity, percentage of germination, and amount of Pure Live Seed (PLS) per bag.
      d. Listing of type of cover crop to be used and rates and procedures for planting if fall planting of Native Grass is anticipated.
      e. Type of herbicide to be used during first growing season to contain annual weeds and application rate.

f. Source and location of sod, plants, and plant material, as per paragraphs 3. 2 C.1 and 3.3 A.

4. Certification:
   a. Certify each container of seed delivered will be labeled in accordance with Federal and State Seed Laws and equals or exceeds Specification requirements.

1.4 SEQUENCING AND SCHEDULING

A. Installation Schedule:
   1. Show schedule of when lawn type and other grass areas are anticipated to be planted.
   2. Indicate planting schedules in relation to schedule for finish grading and topsoiling.
   3. Indicate anticipated dates City of Boerne will be required to review installation for initial acceptance and final acceptance.

B. Pre-installation Meeting:
   1. Meet with Engineer and other parties as necessary to discuss schedule and methods, unless otherwise indicated by Engineer.

PART 2 - PRODUCTS

2.1 MATERIALS

A. Seed Quality: Fresh, clean, new-crop seed labeled in accordance with U.S. Department of Agriculture Rules and Regulations under Federal Seed Act in effect on date of bidding. Provide seed of species, proportions, and minimum percentages of purity, germination and maximum percentage of weed seed as specified. Approval of all seed for use shall be based on the accumulative total of PLS specified for each phase of work.

B. Sod: Viable, dense, strongly rooted, not less than 2 years old.
   1. Buffalograss (Buchloe dactyloides), or Bermudagrass (Cynodon dactylon).
   2. Free of weeds and undesirable native grasses.
   3. Strips 12 to 18 IN wide.
   4. Mow prior to stripping from field.
   5. Cut so 3/4 IN of soil is firmly attached to roots.
   6. Not frozen or dormant.

C. Temporary Winter Seed Mixture: Fresh, clean, new-crop seed per TxDOT Item 164.
   1. Tall Fescue (Festuca arundinaceae): 4.5 PLS per acre.
   2. Oats (Avena sativa): 24 PLS per acre.
   3. Wheat (Red, Winter), (Triticum aestivum): 34 PLS per acre.

D. Summer Seed Mixture: Certified seed of locally adapted strains per TxDOT Item 164.
   1. Green Sprangletop (Leptochloa dubia): 0.3 PLS per acre.
   2. Sideoats Grama (Bouteloua curtipendula, Haskell variety): 3.6 PLS per acre.
   3. Bermudagrass (Cynodon dactylon): 2.4 PLS per acre.
   4. Buffalograss, Texoka (Buchloe dactyloides): 1.6 PLS per acre.

E. Mulch:
   1. For seeded areas: Clean, seed-free, threshed straw of oats, wheat, barley, rye, beans, peanuts, or other locally available mulch material which does not contain an excessive quantity of matured seeds of noxious weeds or other species that will grow or be detrimental to seeding, or provide a menace to surrounding land. Do not use material which is fresh or excessively brittle, or which is decomposed and will smother or retard growth of grass.
   2. Native grass seeded areas. Weed-free hay, excluding brome or bluegrass hay, used on slopes 4:1 or greater.

F. Erosion Control Fabric:
   1. Curled wood fiber mesh fabric.

2. Min. 80% of fibers: 6 IN long or longer.
3. Free of seed or chemical additives.
4. For slopes 3H:1V or flatter:
   a. Min. shear strength 1.60 LB/SF.
   b. One layer of fiber mesh covered on top with biodegradable or photodegradable netting.
5. For slopes 1.5H:1V or flatter:
   a. Min. shear strength 2.25 LB/SF.
   b. Two layers of fiber mesh covered on top and bottom with biodegradable or photodegradable netting.
6. Staples to secure fabric:
   a. 6 IN long with 1 IN wide head and anchoring ears.
   b. Manufactured from 100% biodegradable resins.

G. Fertilizer: Commercial fertilizer meeting applicable requirements of State and Federal law. Cyanic compound or hydrated lime not permitted in mixed fertilizers.
   1. For seeding and sod: 5-10-5 analysis.

H. Asphalt Binder: Emulsified asphalt per State specifications.

I. Water: Water free from substances harmful to grass or sod growth. Provide water from source approved prior to use.

PART 3 - EXECUTION

3.1 SOIL PREPARATION

A. General:
   1. Limit preparation to areas which will be planted soon after.
   2. Provide facilities to protect and safeguard all persons on or about premises.
   3. Protect existing trees designated to remain.
   4. Verify location and existence of all underground utilities. Take necessary precaution to protect existing utilities from damage due to construction activity. Repair all damages to utility items at sole expense.
   5. Provide facilities such as protective fences and/or watchmen to protect work from vandalism. Contractor to be responsible for vandalism until acceptance of work in whole or in part.

B. Preparation for Seeding, or Sodding:
   1. Loosen surface to minimum depth of 4 IN. Remove stones over 1 IN in any dimension and sticks, roots, rubbish, and other extraneous matter.
   2. Prior to applying fertilizer, loosen areas to be seeded with a double disc or other suitable device if the soil has become hard or compacted. Correct any surface irregularities in order to prevent pocket or low areas which will allow water to stand.
   3. Distribute fertilizer uniformly over areas to be seeded:
      a. 30 LBS per 1000 SF.
   4. Incorporate fertilizer into soil to a depth of at least 2 IN by disking, harrowing, or other approved methods. Remove stones or other substances from surface which will interfere with turf development or subsequent mowing operations.
   5. Grade lawn areas to a smooth, even surface with a loose, uniformly fine texture. Roll and rake, remove ridges and fill depressions, as required to meet finish grades. Limit fine grading to areas which can be planted soon after preparation.
   6. Restore lawn areas to specified condition if eroded or otherwise disturbed after fine grading and before planting.

3.2 INSTALLATION

A. Seeding:

1. Optimum planting period:
   a. Summer mixture: Feb. 1 to May 1.
   b. Winter mixture: Sept 1 to Nov. 30.
2. If winter mixture is sown, re-sow area with summer mixture during optimum planting period.
3. Do not use seed which is wet, moldy, or otherwise damaged.
4. Employ satisfactory methods of sowing using mechanical power-driven drills or seeders, or mechanical hand seeders, or other approved equipment.
5. Distribute seed evenly over entire area at rate of application specified by the mixture, 50 percent sown in one direction, remainder at right angles to first sowing.
6. Stop work when work extends beyond most favorable planting season for species designated, or when satisfactory results cannot be obtained because of drought, high winds excessive moisture, or other factors. Resume work only when favorable conditions develop.
7. Lightly rake seed into soil followed by light rolling or cultipacking.
8. Immediately protect seeded areas against erosion by mulching or installing erosion control fabric.
   a. Spread mulch in continuous blanket using 1-1/2 tons per acre to a depth of 4 or 5 straws.
      1) Immediately following spreading mulch, anchor mulch using a rolling coulter or a wheatland land packer having wheels with V-shaped edges to force mulch into soil surface, or
      2) apply evenly distributed emulsified asphalt at rate of 10-13 GAL/1000 SF. SS-1 emulsion in accordance with ASTM D977 or RC-10 cutback asphalt in accordance with ASTM D2028 are acceptable. If mulch and asphalt are applied in one treatment, use SS-1 emulsion with penetration test range between 150-200. Use appropriate shields to protect adjacent site improvements.
   b. Install erosion control fabric in accordance with manufacturer's instructions.
      1) Staple fabric in place with biodegradable staples.
      2) Roll fabric downhill on long slopes.
      3) Overlap edges of fabric 2-3 IN.
9. Protect seeded areas against traffic or other use by erecting barricades and placing warning signs.

,

10. If hydroseeding is used, machinery must be approved, modern, properly equipped and operated by an experienced operator. Seed and fertilize at the rate specified. Use appropriate shields to protect adjacent site improvements.

B. Sodding:
1. Notify Engineer of source and location of sod at least 30 days prior to sodding operation, to permit inspection. Submit species and percentages of purity and state botanical and common names.
2. Sod areas as designated and disturbed lawn areas which were sodded or established prior to construction.
3. Perform sodding only during climatic or weather conditions conducive to successful results. Lay within 24 HRS of stripping. Do not use dormant or frozen sod. Sodding may be accomplished at all seasonal periods providing adequate provisions for sod protection are taken to ensure fitness and survival. Do not place sod when temperature is below 32 DegF. Do not place frozen or dried out sod. Do not sod on frozen or dried out soil.
4. Lay sod to form a solid mass with tightly fitted joints. Butt ends and edges; do not overlap. Stagger joints. Tamp or roll lightly to ensure full contact with subgrade. Work sifted soil into minor cracks, avoid smothering adjacent grass. Peg sod on slopes to prevent slippage. Use sharpened 1 x 1 x 6 IN wooden pegs.

3.3 MAINTENANCE AND REPLACEMENT

A. General:

1. Begin maintenance of planted areas immediately after each portion is planted and continue until final acceptance or for a specific time period as stated below, whichever is the longer.
2. Provide and maintain temporary piping, hoses, and watering equipment as required to convey water from water sources and to keep planted areas uniformly moist as required for proper growth.
3. Protection of new materials:
   a. Provide barricades, coverings or other types of protection necessary to prevent damage to existing improvements indicated to remain. Repair and pay for all damaged items.
4. Replace unacceptable materials with materials and methods identical to the original specifications unless otherwise approved by the Engineer.

B. Seeded or Sodded Lawns:
1. Maintain seeded lawns: 90 days, minimum, after installation and review of entire project area to be planted.
2. Maintain sodded lawns: 30 days, minimum, after installation and review of entire project area to be sodded.
3. Maintenance period begins at completion of planting or installation of entire area to be seeded or sodded.
4. City of Boerne will review seeded or sodded lawn area after installation for initial acceptance.
5. Maintain lawns by watering, fertilizing, weeding, mowing, trimming, and other operations such as rolling, regrading, and replanting as required to establish a smooth, uniform lawn, free of weeds and eroded or bare areas.
6. Lay out temporary lawn watering system and arrange watering schedule to avoid walking over muddy and newly seeded areas. Use equipment and water to prevent puddling and water erosion and displacement of seed or mulch.
7. Mow lawns as soon as there is enough top growth to cut with mower set at recommended height for principal species planted. Repeat mowing as required to maintain height. Do not delay mowing until grass blades bend over and become matted. Do not mow when grass is wet. Time initial and subsequent mowings as required to maintain a height of 1-1/2 to 2 IN. Do not mow lower than 1-1/2 IN.
8. Remulch with new mulch in areas where mulch has been disturbed by wind or maintenance operations sufficiently to nullify its purpose. Anchor as required to prevent displacement.
9. Replace erosion control fabric if damaged.
10. Unacceptable plantings are those areas that do not meet the quality of the specified material, produce the specified results, or were not installed to the specified methods.
11. Replant bare areas using same materials specified.
12. City of Boerne will review final acceptability of installed areas at end of maintenance period.
13. Maintain repaired areas until remainder of maintenance period or approved by City of Boerne, whichever is the longer period.

3.4 ACCEPTANCE

A. Seeded areas: When grass growth reaches at least 1 IN tall over 85% of the area seeded and bare areas have been reseeded.

B. Sodded areas: When grass has been in place for 7 days and 85% of sod is surviving and growing and remaining has been replaced with new sod.

END OF SECTION

City of Boerne

DIVISION 3

SECTION 03002
CONCRETE

PART 1 - GENERAL

1.1 SUMMARY

A. Section Includes:
   1. Cast-in-place concrete and grout.

B. Related Sections include but are not necessarily limited to:
   1. Division 0 - Bidding Requirements, Contract Forms, and Conditions of the Contract.
   2. Division 1 - General Requirements.

1.2 QUALITY ASSURANCE

A. Referenced Standards:
   1. American Concrete Institute (ACI):
      a. 116R, Cement and Concrete Terminology.
      b. 211.1, Standard Practice for Selecting Proportions for Normal, Heavyweight and Mass Concrete.
      c. 212.3R, Chemical Admixtures for Concrete.
      d. 304R, Guide for Measuring, Mixing, Transporting, and Placing Concrete.
      e. 304.2R, Placing Concrete by Pumping Methods.
      f. 305R, Hot Weather Concreting.
      g. 306R, Cold Weather Concreting.
      h. 318, Building Code Requirements for Structural Concrete.
      i. 347R, Recommended Practice for Concrete Formwork.
   2. American Society for Testing and Materials (ASTM):
      a. A82, Standard Specification Steel Wire, Plain, for Concrete Reinforcement.
      b. A185, Standard Specification for Steel Welded Wire Fabric, Plain, for Concrete Reinforcement.
      c. A615, Standard Specification for Deformed and Plain Billet-Steel Bars for Concrete Reinforcement (Including Supplementary Requirements S1).
      d. C31, Standard Practice for Making and Curing Concrete Test Specimens in the Field.
      e. C33, Standard Specification for Concrete Aggregates.
      f. C39, Standard Test Method for Compressive Strength of Cylindrical Concrete Specimens.
      g. C94, Standard Specification for Ready-Mixed Concrete.
      h. C138, Standard Method of Test for Unit Weight, Yield, and Air Content (Gravimetric) of Concrete.
      i. C143, Standard Test Method for Slump of Hydraulic Cement Concrete.
      j. C150, Standard Specification for Portland Cement.
      k. C157, Standard Test Method for Length Change of Hardened Hydraulic Cement Mortar and Concrete.
      l. C171, Standard Specification for Sheet Materials for Curing Concrete.
      m. C172, Standard Practice for Sampling Freshly Mixed Concrete.
      n. C173, Standard Test Method for Air Content of Freshly Mixed Concrete by the Volumetric Method.
      o. C231, Standard Test Method for Air Content of Freshly Mixed Concrete by the Pressure Method.
      p. C260, Standard Specification for Air Entraining Admixtures for Concrete.
      q. C289, Standard Test Method for Potential Alkali-Silica Reactivity of Aggregates (Chemical Method).

r. C309, Standard Specification for Liquid Membrane-Forming Compounds for Curing Concrete.
s. C494, Standard Specification for Chemical Admixtures for Concrete.
t. C618, Standard Specification for Coal Fly Ash and Raw or Calcined Natural Pozzolan for Use as a Mineral Admixture in Concrete.
u. D994, Standard Specification for Preformed Expansion Joint Filler for Concrete (Bituminous Type).
v. D1056, Standard Specification for Flexible Cellular Materials Sponge or Expanded Rubber.
w. D1751, Standard Specification for Preformed Expansion Joint Filler for Concrete Paving and Structural Construction (Nonextruding and Resilient Bituminous Types).
x. E329, Standard Specification for Agencies Engaged in the Testing and/or Inspection of Materials Used in Construction.

3. United States Army Corps of Engineers (COE):
   a. CRD-C572, Polyvinyl Waterstops.
4. Federal Specification (FS):
   a. CEGS 03300, Vegetable Fiber.

B. Quality Control:
1. Concrete testing agency.
   a. Contractor to employ and pay for services of a testing laboratory to:
      1) Perform materials evaluation.
      2) Design concrete mixes.
   b. Concrete testing agency to meet requirements of ASTM E329.
2. Do not begin concrete production until proposed concrete mix design has been approved by Engineer.
   a. Approval of concrete mix design by Engineer does not relieve Contractor of his responsibility to provide concrete that meets the requirements of this Specification.
3. Adjust concrete mix designs when material characteristics, job conditions, weather, strength test results or other circumstances warrant.
   a. Do not use revised concrete mixes until submitted to and approved by Engineer.
4. Perform structural calculations as required to prove that all portions of the structure in combination with remaining forming and shoring system has sufficient strength to safely support its own weight plus the loads placed thereon.

C. Qualifications:
1. Ready mixed concrete batch plant certified by National Ready Mixed Concrete Association (NRMCA).
2. Formwork, shoring and reshoring for slabs and beams except where cast on ground to be designed by a professional engineer currently registered in the state where the project is located.

1.3 DEFINITIONS

A. Per ACI 116R except as modified herein:
1. Concrete fill: Non-structural concrete.
2. Concrete Testing Agency: Testing agency employed to perform materials evaluation, design of concrete mixes or testing of concrete placed during construction.
3. Exposed concrete: Exposed to view after construction is complete.
4. Indicated: Indicated by Contract Documents.
5. Lean concrete: Concrete with low cement content.
6. Nonexposed concrete: Not exposed to view after construction is complete.
7. Required: Required by Contract Documents.
8. Specified strength: Specified compressive strength at 28 days.
9. Submitted: Submitted to Engineer.

1.4 SUBMITTALS

A. Shop Drawings:
   1. See Section 01340.
   2. Concrete mix designs proposed for use. Concrete mix design submittal to include the following information:
      a. Sieve analysis and source of fine and coarse aggregates.
      b. Test for aggregate organic impurities.
      c. Test for deleterious aggregate per ASTM C289.
      d. Proportioning of all materials.
      e. Type of cement with mill certificate for cement.
      f. Type of fly ash with certificate of conformance to specification requirements.
      g. Slump.
      h. Air content.
      i. Brand, type, ASTM designation, and quantity of each admixture proposed for use.
      j. 28-day cylinder compressive test results of trial mixes per ACI 318 and as indicated herein.
      k. Shrinkage test results.
      l. Standard deviation value for concrete production facility.
   3. Manufacturer and type of joint filler, joint sealant, curing agent and chemical floor hardener.
   4. Manufacturer and type of bonding and patching mortar and bonding adhesive used at construction joints.
   5. Manufacturer and type of nonshrink grout and the cure/seal compound required for the nonshrink grout.
   6. Reinforcing steel: Show grade, sizes, number, configuration, spacing, location and all fabrication and placement details.
      a. In sufficient detail to permit installation of reinforcing without having to make reference to Contract Drawings.
      b. Obtain approval of shop drawings by Engineer before fabrication.
      c. Mill certificates.
   7. Strength test results of in place concrete including slump, air content and concrete temperature.

1.5 DELIVERY, STORAGE, AND HANDLING

A. Storage of Material:
   1. Cement and fly ash:
      a. Store in moistureproof, weathertight enclosures.
      b. Do not use if caked or lumpy.
   2. Aggregate:
      a. Store to prevent segregation and contamination with other sizes or foreign materials.
      b. Obtain samples for testing from aggregates at point of batching.
      c. Do not use frozen or partially frozen aggregates.
      d. Do not use bottom 6 IN of stockpiles in contact with ground.
      e. Allow sand to drain until moisture content is uniform prior to use.
   3. Admixtures:
      a. Protect from contamination, evaporation, freezing, or damage.
      b. Maintain within temperature range recommended by manufacturer.
      c. Completely mix solutions and suspensions prior to use.
   4. Reinforcing steel:
      a. Support and store all rebars above ground.

B. Delivery:
   1. Concrete:
      a. Prepare a delivery ticket for each load for ready-mixed concrete.
      b. Truck operator shall hand ticket to Engineer at the time of delivery.
      c. Ticket to show:
         1) Mix identification mark.

2) Quantity delivered.
3) Amount of each material in batch.
4) Outdoor temp in the shade.
5) Time at which cement was added.
6) Numerical sequence of the delivery.
7) Amount of water added.

2. Reinforcing steel: Ship to jobsite with attached plastic or metal tags with permanent mark numbers.
   a. Mark numbers to match shop drawing mark number.

PART 2 - PRODUCTS

2.1 ACCEPTABLE MANUFACTURERS

A. Subject to compliance with the Contract Documents, the following manufacturers are acceptable:
1. Nonshrink, nonmetallic grout:
   a. Sika "SikaGrout 212."
   b. Gifford Hill "Supreme Grout."
   c. Master Builders "Masterflow 713."
2. Epoxy grout:
   a. Master Builders "Brutem MPG."
   b. Euclid Chemical Company, "High Strength Grout."
   c. Fosroc, "Conbextra EPHF".
3. Expansion joint fillers:
   a. Permaglaze Co.
   b. Rubatex Corp.
   c. Williams Products, Inc.
4. Waterstops, PVC:
   a. Greenstreak Plastic Products, Inc.
   b. W.R.Meadows, Inc.
   c. Burke Company.
5. Form coating:
   a. Richmond "Rich Cote."
   b. Industrial Lubricants "Nox-Crete Form Coating."
   c. Protex "Pro-Cote."
6. Prefabricated forms:
   a. Simplex "Industrial Steel Frame Forms."
   b. Symons "Steel Ply."
   c. Universal "Uniform."
7. Chemical Floor Hardeners.
   a. L & M Construction Chemicals, Inc.
   b. Euclid Chemicals Inc.
   c. Dayton Superior.

2.2 MATERIALS

A. Portland Cement: Conform to ASTM C150 Type I, Type II for wastewater structures.

B. Fly Ash:
1. ASTM C618, Class F or Class C, Class F for wastewater structures.
2. Nonstaining.
   a. Hardened concrete containing fly ash to be uniform light gray color.
3. Maximum loss on ignition: 4 percent.
4. Compatible with other concrete ingredients.

5. Obtain proposed fly ash from a source approved by the State Highway Department in the state where the Project is located for use in concrete for bridges.
6. Do not use for precast concrete.

C. Admixtures:
1. Air entraining admixtures: ASTM C260.
2. Water reducing, retarding, and accelerating admixtures:
   a. ASTM C494 Type A through E.
   b. Conform to provisions of ACI 212.3R.
   c. Do not use retarding or accelerating admixtures unless specifically approved in writing by Engineer and at no cost to Owner.
   d. Follow manufacturer's instructions.
   e. Use chloride free admixtures only.
3. Maximum total water soluble chloride ion content contributed from all ingredients of concrete including water, aggregates, cementitious materials and admixtures by weight percent of cement:
   a. 0.06 prestressed concrete.
   b. 0.10 all other concrete.
4. Do not use calcium chloride.
5. Pozzolanic admixtures: ASTM C618.
6. Provide admixtures of same type, manufacturer and quantity as used in establishing required concrete proportions in the mix design.

D. Water: Potable, clean, free of oils, acids and organic matter.

E. Aggregates:
1. Normal weight concrete: ASTM C33, except as modified below.
2. Fine aggregate: Clean natural sand.
   a. No manufactured or artificial sand.
3. Coarse aggregate: Crushed rock, natural gravel, or other inert granular material.
   a. Maximum amount of clay or shale particles: 1 percent.
4. Gradation of coarse aggregate:
   a. Lean concrete and concrete topping: Size #7.
   b. All other concrete: Size #57 or #67.
   c. Or as specified elsewhere in Contract Documents.

F. Concrete Grout:
1. Nonshrink nonmetallic grout:
   a. Nonmetallic, noncorrosive, nonstaining, premixed with only water to be added.
   b. Grout to produce a positive but controlled expansion.
   c. Mass expansion not to be created by gas liberation.
   d. Minimum compressive strength of nonshrink grout at 28 days: 6500 psi.
2. Epoxy grout:
   a. 3-component epoxy resin system.
      1) Two liquid epoxy components.
      2) One inert aggregate filler component.
   b. Each component packaged separately for mixing at jobsite.

G. Reinforcing Steel:
1. Reinforcing bars: ASTM A615, Grade 60.
2. Welded wire fabric: ASTM A185.
   a. Minimum yield strength: 60,000 psi.
   b. Supplied in flat sheets.
3. Column spirals: ASTM A82.

H. Forms:
1. Prefabricated or job built.
2. Wood forms:

a. New 5/8 or 3/4 IN 5-ply structural plywood of concrete form grade.
b. Built-in-place or prefabricated type panel.
c. 4 x 8 FT sheets for built-in-place type except where smaller pieces will cover entire area.
d. When approved, plywood may be reused.

3. Metal forms:
   a. Metal forms excluding aluminum may be used.
   b. Forms to be tight to prevent leakage, free of rust and straight without dents to provide members of uniform thickness.
4. Chamfer strips: Clear white pine, surface against concrete planed.
5. Form ties: Removable end, permanently embedded body type with cones on outer ends not requiring auxiliary spreaders.
   a. Cone diameter: 3/4 IN minimum to 1 IN maximum.
   b. Embedded portion 1 IN minimum back from concrete face.
   c. If not provided with threaded ends, constructed for breaking off ends without damage to concrete.
   d. Provide ties with built-in waterstops at all walls that will be in contact with process liquid during plant operation.
6. Form release: Nonstaining and shall not prevent bonding of future finishes to concrete surface.

I. Waterstops:
1. Plastic: Corp of Engineers Specification CRD-C572.
2. Serrated with center bulb.
3. Thickness: 3/8 IN.
4. Length (general use): 6 IN unless indicated otherwise.
5. Expansion joints:
   a. Length: 9 IN.
   b. Center bulb: 1 IN OD x 1/2 IN ID.
6. Provide hog rings or grommets spaced at maximum 12 IN OC along the length of the water stop.
7. Provide factory made waterstop fabrications at all changes of direction, intersections and transitions leaving only straight butt splices for the field.

J. Chairs, Runners, Bolsters, Spacers, and Hangers:
1. Stainless steel, epoxy coated, or plastic coated metal.
   a. Plastic coated: Rebar support tips in contact with the forms only.

K. Chemical Floor Hardener:
1. Colorless deep-penetrating solution containing 100 percent active silicate chemicals with a non-acid penetrant.
   a. Meet FS CEGS 03300.
2. Provide materials which do not react with, inhibit, or otherwise interfere with adhesives and bonding of future floor finishes.
3. Similar to L & M Construction Chemicals Inc. "Chemhard", or Euclid Chemical Co. "Eucosil".

L. Vapor Barrier: Clear 6-mil thick polyethylene conforming to ASTM C171.

M. Membrane Curing Compound: ASTM C309, Type I-D.
1. Resin based, dissipates upon exposure to UV light.
2. Curing compound shall not prevent bonding of any future coverings, coatings or finishes.
3. Curing compounds used in water treatment plant construction to be nontoxic and taste and odor free.

N. Expansion Joint Filler:
1. In contact with water or sewage:
   a. Closed cell neoprene.

b. ASTM D1056, Class SC (oil resistant and medium swell) of 2 to 5 psi compression deflection (Grade SCE41).

2. Exterior driveways, curbs and sidewalks:
   a. Asphalt expansion joint filler.
   b. ASTM D994.
3. Other use:
   a. Fiber expansion joint filler.
   b. ASTM D1751.

2.3 CONCRETE MIXES

A. General:
1. All concrete to be ready mixed concrete conforming to ASTM C94.
2. Provide concrete of specified quality capable of being placed without segregation and, when cured, of developing all properties required.
3. All concrete to be normal weight concrete except where lightweight concrete is indicated on Drawings.

B. Strength:
1. Provide specified strength and type of concrete for each use in structure(s) as follows:

TYPE	WEIGHT	SPECIFIED STRENGTH*
Concrete Fill	Normal weight	3000 psi
Lean Concrete	Normal weight	2000 psi
Concrete Topping	Normal weight & Lightweight	4000 psi
All other general use Concrete	Normal weight	4000 psi

*Minimum 28-day compressive strength.

C. Air Entrainment: Air entrainment is not required, but may be provided at Contractor's option to make a more workable mix. Air content shall be at least 3% in all concrete unless otherwise specified on the plans.

1. Air content to be measured in accordance with ASTM C231, ASTM C173, or ASTM C138.

D. Slump: 4 IN maximum, 1 IN minimum.
1. Measured at point of discharge of the concrete into the concrete construction member.
2. Concrete of lower than minimum slump may be used provided it can be properly placed and consolidated.
3. Pumped concrete:
   a. Provide additional water at batch plant to allow for slump loss due to pumping.
   b. Provide only enough additional water so that slump of concrete at discharge end of pump hose does not exceed maximum slump specified above.
4. Determine slump per ASTM C143.

E. Selection of Proportions:
1. General - Proportion ingredients to:
   a. Produce proper workability, durability, strength, and other required properties.
   b. Prevent segregation and collection of excessive free water on surface.
2. Minimum cement contents and maximum water cement ratios for concrete to be as follows:

SPECIFIED STRENGTH	MINIMUM CEMENT, LB/CY MAXIMUM AGGREGATE SIZE, IN 1/2	¾	1	MAXIMUM WATER CEMENT RATIO BY WEIGHT
2000		376	376	0.60
3000	---	517	517	0.50
4000	611	611	611	0.45
5000	---	686	665	0.40

3. Substitution of fly ash:
   a. Maximum of 25 percent by weight of cement at rate of 1 LB fly ash for 1 LB of cement.
4. Sand cement grout:
   a. Three parts sand.
   b. One part Portland cement.
   c. Entrained air: Six percent plus or minus one percent.
   d. Sufficient water for required workability.
   e. Minimum 28-day compressive strength: 3,000 psi.
5. Pan stair fill:
   a. Coarse aggregate: 100 percent passing a 1/2 IN sieve.
   b. Proportions:
      1) 1 sack cement.
      2) 150 LBS coarse aggregate.
      3) 150 LBS fine aggregate (sand).
   c. Adjust mix to obtain satisfactory finishing.
6. Submit mix design data as required by this specification section.
7. Normal weight concrete: Proportion mixture to provide desired characteristics using one of methods described below:
   a. Method 1 (Trial Mix): Per ACI 318, Chapter 5, except as modified herein.
      1) Air content within range specified above.
      2) Record and report temperature of trial mixes.
      3) Proportion trial mixes per ACI 211.1.
   b. Method 2 (Field Experience): Per ACI 318, Chapter 5, except as modified herein:
      1) Field test records must be acceptable to Engineer to use this method.
      2) Test records shall represent materials, proportions and conditions similar to those specified.
8. Required average strength to exceed the specified 28-day compressive strength by the amount determined or calculated in accordance with the requirements of paragraph 5.3 of ACI 318 using the standard deviation of the proposed concrete production facility as described in paragraph 5.3.1 of ACI 318.

F. Allowable Shrinkage: 0.048 percent per ASTM C157.

PART 3 - EXECUTION

3.1 FORMING AND PLACING CONCRETE

A. General:
   1. Contractor is responsible for design and erection of formwork.
   2. Construct formwork so that concrete members and structures are of correct size, shape, alignment, elevation and position.
      a. Allowable tolerances: As recommended in ACI 347R.
   3. Provide slabs and beams of minimum indicated depth when sloping foundation base slabs or elevated floor slabs to drains.
      a. For slabs on grade, slope top of subgrade to provide floor slabs of minimum uniform indicated depth.

b. Do not place floor drains through beams.

B. Openings: Provide openings in formwork to accommodate work of other trades.
   1. Accurately place and securely support items built into forms.

C. Chamfer Strips: Place 3/4 IN chamfer strips in forms to produce 3/4 IN wide beveled edges on permanently exposed corners of members.

D. Reinforcement:
   1. Position, support and secure reinforcement against displacement.
   2. Locate and support with chairs, runners, bolsters, spacers and hangers, as required.
   3. Set wire ties so ends do not touch forms and are directed into concrete, not toward exposed concrete surfaces.
   4. Lap splice lengths: ACI 318 Class B top bar tension splices unless indicated otherwise on the Drawings.
   5. Extend reinforcement to within 2 IN of concrete perimeter edges.
      a. If perimeter edge is earth formed, extend reinforcement to within 3 IN of the edge.
   6. Unless otherwise indicated, provide minimum concrete cover as follows:
      a. Concrete deposited against earth: 3 IN.
      b. Formed surfaces exposed to weather or in contact with earth: 2 IN for reinforcing bars #6 or larger; 1-1/2 IN for reinforcing bars less than #6.
      c. Formed surfaces exposed to or located above any liquid: 2 IN.
      d. Interior surfaces: 1-1/2 IN for beams, girders and columns; 3/4 IN or bar diameter, whichever is greater, for slabs, walls and joists.
   7. Do not weld reinforcing bars.
   8. Welded wire fabric:
      a. Install welded wire fabric in maximum practical sizes.
      b. Splice sides and ends with a splice lap length measured between outermost cross wires of each fabric sheet not less than:
         1) One spacing of cross wires plus 2 IN.
         2) 1.5 x development length.
         3) 6 IN.
      c. Development length: ACI 318 basic development length for the specified fabric yield strength.

E. Construction, Expansion, and Contraction Joints:
   1. Provide at locations indicated.
   2. Locate wall vertical construction joints at 30 FT maximum centers and wall horizontal construction joints at 10 FT maximum centers.
   3. Locate construction joints in floor slabs and foundation base slabs so that concrete placements are approximately square and do not exceed 2500 SF.
   4. Locate construction joints in columns and walls:
      a. At the underside of beams, girders, haunches, drop panels, column capitals, and at floor panels.
      b. Haunches, drop panels, and column capitals are considered part of the supported floor or roof and shall be placed monolithically therewith.
      c. Column based need not be placed monolithically with the floor below.
   5. Locate construction joints in beams and girders:
      a. At the middle of the span, unless a beam intersects a girder at that point.
      b. If the middle of the span is at an intersection of a beam and girder, offset the joint in the girder a distance equal to twice the beam width.
      c. Provide satisfactory means for transferring shear and other forces through the construction joint.
   6. Locate construction joints in suspended slabs:
      a. At or near the center of span in flat slab or T-beam construction.
      b. Do not locate a joint between a slab and a concrete beam or girder unless so indicated on Drawings.

7. In pan-formed joists:
   a. At or near span center when perpendicular to the joists.
   b. Centered in the slab, midway between joists, when parallel to the joists.
8. Install construction joints in beams, slabs, and girders perpendicular to the planes of their surfaces.
9. At least 48 HRS shall elapse between placing of adjoining concrete construction.
10. Thoroughly clean and remove all laitance and loose and foreign particles from construction joints.
11. Before new concrete is placed, coat all construction joints with an approved bonding adhesive used and applied in accordance with manufacturer's instructions.

F. Embedments:
1. Set and build in anchorage devices and other embedded items required for other work that is attached to, or supported by concrete.
2. Use setting diagrams, templates and instructions for locating and setting.
3. Secure waterstops in correct position using hog rings or grommets spaced along the length of the waterstop and wire tie to adjacent reinforcing steel.

G. Preparation:
1. Clean and adjust forms prior to concrete placement.
2. Tighten forms to prevent mortar leakage.
3. Coat form surfaces with form release agents prior to placing reinforcing bars in forms.

H. Placing Concrete:
1. Place concrete in compliance with ACI 304R and 304.2R.
2. Place in a continuous operation within planned joints or sections.
3. Begin placement when work of other trades affecting concrete is completed.
4. Place concrete by methods which prevent aggregate segregation.
5. Do not allow concrete to free fall more than 4 FT.
6. Where free fall of concrete will exceed 4 FT, place concrete by means of tremie pipe or chute.

I. Consolidation:
1. Consolidate all concrete using mechanical vibrators supplemented with hand rodding and tamping, so that concrete is worked around reinforcement and embedded items into all parts of forms.

J. Protection:
1. Protect concrete from physical damage or reduced strength due to weather extremes.
2. In cold weather comply with ACI 306R except as modified herein.
   a. Do not place concrete on frozen ground or in contact with forms or reinforcing bars coated with frost, ice or snow.
   b. Minimum concrete temperature at the time of mixing:

OUTDOOR TEMPERATURE AT PLACEMENT (IN SHADE)	CONCRETE TEMPERATURE AT MIXING
Below 30 DegF	70 DegF
Between 30-45 DegF	60 DegF
Above 45 DegF	50 DegF

   c. Do not place heated concrete that is warmer than 80 DegF.
   d. If freezing temperatures are expected during curing, maintain the concrete temperature at or above 50 DegF for 7 days or 70 DegF for 3 days.
   e. Do not allow concrete to cool suddenly.
3. In hot weather comply with ACI 305R except as modified herein.
   a. At air temperature of 90 DegF and above, keep concrete as cool as possible during placement and curing.

b. Do not allow concrete temperature to exceed 90 DegF at placement.
c. Prevent plastic shrinkage cracking due to rapid evaporation of moisture.
d. Do not place concrete when the actual or anticipated evaporation rate equals or exceeds 0.2 LBS/SF/HR as determined from ACI 305R, Figure 2.1.5.

K. Curing:
1. Begin curing concrete as soon as free water has disappeared from exposed surfaces.
2. Cure concrete by use of moisture retaining cover, burlap kept continuously wet or by membrane curing compound.
3. Provide protection as required to prevent damage to concrete and to prevent moisture loss from concrete during curing period.
4. Provide curing for minimum of 7 days.
5. Form materials left in place may be considered as curing materials for surfaces in contact with the form materials except in periods of hot weather.
6. In hot weather follow curing procedures outlined in ACI 305R.
7. In cold weather follow curing procedures outlined in ACI 306R.
8. If forms are removed before 7 days have elapsed, finish curing of formed surfaces by one of above methods for the remainder of the curing period.
9. Curing vertical surfaces with a curing compound: Cover vertical surfaces with a minimum of two coats of the curing compound.
a. Allow the preceding coat to completely dry prior to applying the next coat.
b. Apply the first coat of curing compound immediately after form removal.
c. Vertical surface at the time of receiving the first coat shall be damp with no free water on the surface.
d. A vertical surface is defined as any surface steeper than 1 vertical to 4 horizontal.

L. Form Removal:
1. Remove forms after concrete has hardened sufficiently to resist damage from removal operations or lack of support.
2. Where no reshoring is planned, leave forms and shoring used to support concrete until it has reached its specified 28-day compressive strength.
3. Where reshoring is planned, supporting formwork may be removed when concrete has sufficient strength to safely support its own weight and loads placed thereon.
a. While reshoring is underway, no superimposed loads shall be permitted on the new construction.
b. Place reshores as soon as practicable after stripping operations are complete but in no case later than the end of working day on which stripping occurs.
c. Tighten reshores to carry their required loads.
d. Leave reshores in place until concrete being supported has reached its specified 28-day compressive strength.

3.2 CONCRETE FINISHES

A. Tolerances:
1. Class A: 1/8 IN in 10 FT.
2. Class B: 1/4 IN in 10 FT.

B. Surfaces Exposed to View:
1. Provide a smooth finish for exposed concrete surfaces and surfaces that are:
a. To be covered with a coating or covering material applied directly to concrete.
b. Scheduled for grout cleaned finish.
2. Remove fins and projections, and patch voids, air pockets, and honeycomb areas with cement grout.
3. Fill tie holes with nonshrink nonmetallic grout.

C. Surfaces Not Exposed to View:
1. Patch voids, air pockets and honeycomb areas with cement grout.
2. Fill tie holes with nonshrink nonmetallic grout.

D. Grout Cleaned Finish:
   1. Mix a part Portland cement and 1-1/2 parts fine sand with sufficient bonding agent/water mixture to produce a grout with the consistency of thick paint.
      a. White Portland cement shall be substituted for gray Portland cement to produce a color that matches color of surrounding concrete as determined by trial patch for areas not to be painted.
   2. Wet surface of concrete to prevent absorption of water by grout and uniformly apply grout with brushes or spray gun.
   3. Immediately scrub the surface with a cork float or stone to coat and fill air bubbles and holes.
   4. While grout is still plastic, remove all excess grout by working surface with rubber float, sack or other approved means.
   5. After the surface whitens from drying, rub vigorously with clean burlap.
   6. Keep final finish damp for a minimum of 36 HRS after final rubbing.

E. Slab Float Finish:
   1. After concrete has been placed, consolidated, struck off, and leveled, do no further work until ready for floating.
   2. Begin floating when water sheen has disappeared and surface has stiffened sufficiently to permit operation.
   3. During or after first floating, check planeness of entire surface with a 10 FT straightedge applied at not less than two different angles.
   4. Cut down all high spots and fill all low spots during this procedure to produce a surface within Class B tolerance throughout.
   5. Refloat slab immediately to a uniform sandy texture.

F. Troweled Finish:
   1. Float finish surface.
   2. Next power trowel, and finally hand trowel.
   3. Produce a smooth surface which is relatively free of defects with first hand troweling.
   4. Perform additional trowelings by hand after surface has hardened sufficiently.
   5. Final trowel when a ringing sound is produced as trowel is moved over surface.
   6. Thoroughly consolidate surface by hand troweling.
   7. Leave finished surface essentially free of trowel marks, uniform in texture and appearance and plane to a Class A tolerance.
   8. On surfaces intended to support floor coverings remove any defects of sufficient magnitude that would show through floor covering by grinding.

G. Broom Finish: Immediately after concrete has received a float finish as specified, give it a transverse scored texture by drawing a broom across surface.

H. Apply chemical floor hardener to permanently exposed interior concrete floor slab surfaces where indicated.
   1. Apply in accordance with manufacturer's instructions.

3.3 GROUT

A. Preparation:
   1. Nonshrinking nonmetallic grout:
      a. Clean concrete surface to receive grout.
      b. Saturate concrete with water for 24 HRS prior to grouting.
   2. Rock anchors:
      a. Clean rock anchors of all loose material.
      b. Orient hook or bends in anchor bars to clear anchor bolts, reinforcements, and other embedments to be installed later.
   3. Epoxy grout: Apply only to clean, dry, sound surface.

B. Application:

1. Nonshrinking nonmetallic grout:
    a. Mix in a mechanical mixer.
    b. Use no more water than necessary to produce flowable grout.
    c. Place in accordance with manufacturer's instructions.
    d. Completely fill all spaces and cavities below the bottom of baseplates.
    e. Provide forms where baseplates and bedplates do not confine grout.
    f. Where exposed to view, finish grout edges smooth.
    g. Except where a slope is indicated on Drawings, finish edges flush at the baseplate, bedplate, member, or piece of equipment.
    h. Protect against rapid moisture loss by covering with wet rags or polyethylene sheets.
    i. Wet cure grout for 7 days, minimum.
2. Rock anchors:
    a. See Item 1 above.
    b. If rodded:
        1) Fill each hole so that it overflows when anchor bar is inserted.
        2) Force anchor bars into place.
    c. If pressure placed, set anchor bar before grouting.
    d. Take special care to avoid any movement of anchors that have been placed.
3. Epoxy grout:
    a. Mix and place in accordance with manufacturer's instructions.
    b. Completely fill all cavities and spaces around dowels and anchors without voids.
    c. Obtain manufacturer's field technical assistance as required to ensure proper placement.

3.4 FIELD QUALITY CONTROL

A. Tests During Construction:
1. Strength test - procedure:
    a. Three cylinders, 6 IN DIA x 12 IN high, will be taken from each sample per ASTM C172 and C31.
    b. Cylinders will be tested per ASTM C39:
        1) One at 7 days.
        2) Two at 28 days.
2. Sampling for Strength test - frequency:
    a. Not less than one test each day concrete placed.
    b. Not less than one test for each 50 CY or major fraction thereof placed in one day.
    c. Not less than one test for each type of concrete poured.
    d. Not less than one test for each concrete structure exceeding 2 CY volume.
3. Slump test: Per ASTM C143.
    a. Determined for each strength test sample.
    b. Additional slump tests may be taken.
4. Air content: Per ASTM C231, C173, and C138.
    a. Determined for each strength test sample.
5. Temperature: Determined for each strength test sample.

B. Evaluation of Tests:
1. Strength test results: Average of 28-day strength of two cylinders from each sample.
    a. If one cylinder manifests evidence of improper sampling, molding, handling, curing or testings, strength of remaining cylinder will be test result.
    b. If both cylinders show any of above defects, test will be discarded.

C. Acceptance of Concrete:
1. Strength level of each type of concrete shall be considered satisfactory if both of the following requirements are met:
    a. Average of all sets of three consecutive strength tests equals or exceeds the required specified 28-day compressive strength.
    b. No individual strength test falls below the required specified 28-day compressive strength by more than 500 psi.

2. If tests fail to indicate satisfactory strength level, perform additional tests and/or corrective measures as directed by Engineer.
    a. Perform additional tests and/or corrective measures at no additional cost to Owner.

3.5 SCHEDULES

A. Form Types:
1. Surfaces exposed to view:
    a. Prefabricated or job-built wood forms.
    b. Laid out in a regular and uniform pattern with long dimensions vertical and joints aligned.
    c. Produce finished surfaces free from offsets, ridges, waves, and concave or convex areas.
    d. Construct forms sufficiently tight to prevent leakage of mortar.
2. Surfaces normally submerged or not normally exposed to view:
    a. Wood or steel forms sufficiently tight to prevent leakage of mortar.
3. Other types of forms may be used:
    a. For surfaces not restricted to plywood or lined forms.
    b. As backing for form lining.

B. Grout:
1. Nonshrinking nonmetallic grout: General use.
2. Epoxy grout:
    a. Grouting of dowels and anchor bolts into existing concrete.
    b. Other uses indicated on Drawings.
3. Sand cement grout: Keyways of precast members.

C. Concrete:
1. Precast concrete: Where indicated on Drawings.
2. Lean concrete: Where indicated on Drawings.
3. Concrete fill: Where indicated on Drawings.
4. Lightweight concrete: Where indicated on Drawings.
5. Normal weight concrete: All other locations.
6. Concrete pan fill: Stair and landings where indicated on Drawings.
7. General use concrete: All other locations.

D. Concrete Finishes:
1. Grout cleaned finish: All exposed vertical concrete unless otherwise indicated on Drawings.
2. Slab finishes:
    a. Use following finishes as applicable, unless otherwise indicated:
        1) Floated finish: Surfaces intended to receive roofing, concrete topping, lean concrete, concrete fill and waterproofing.
        2) Troweled finish: Interior floor slabs, exposed roof slabs and base slabs of structures, equipment bases, and column bases.
        3) Broom finish: Sidewalks, docks, concrete stairs, driveways and ramps.

END OF SECTION

City of Boerne

DIVISION 9

SECTION 09905
PAINTING AND PROTECTIVE COATINGS

PART 1 - GENERAL

1.1 SUMMARY

A. Section Includes:
   1. Painting and protective coatings.
   2. Minimum surface preparation requirements.

B. Related Sections include but are not necessarily limited to:
   1. Division 0 - Bidding Requirements, Contract Forms, and Conditions of the Contract.
   2. Division 1 - General Requirements.

1.2 QUALITY ASSURANCE

A. Referenced Standards:
   1. American National Standards Institute (ANSI):
      a. Z535.1, Safety Color Code.
   2. American Society for Testing and Materials (ASTM):
      a. A780, Practice for Repair of Damaged and Uncoated Areas of Hot-Dip Galvanized Coatings.
      b. D4258, Practice for Surface Cleaning Concrete for Coating.
      c. D4259, Practice for Abrading Concrete.
      d. D4261, Practice for Surface Cleaning Concrete Unit Masonry for Coating.
      e. D4262, Test Method for pH of Chemically Cleaned or Etched Concrete Surfaces.
      f. D4263, Test Method for Indicating Moisture in Concrete by the Plastic Sheet Method.
      g. E84, Test Method for Surface Burning Characteristics of Building Materials.
   3. National Fire Protection Association (NFPA):
      a. 101, Life Safety Code.
   4. National Sanitation Foundation International (NSF):
      a. 61, Drinking Water System Components - Health Effects.
   5. Steel Structures Painting Council (SSPC):
      a. PA-2, Measurement of Dry Paint Thickness with Magnetic Gages.
      b. SP-1, Solvent Cleaning.
      c. SP-2, Hand Tool Cleaning.
      d. SP-3, Power Tool Cleaning.
      e. SP-5, White Metal Blast Cleaning.
      f. SP-6, Commercial Blast Cleaning.
      g. SP-7, Brush-off Blast Cleaning.
      h. SP-10, Near-White Blast Cleaning.

B. Qualifications:
   1. Coating manufacturer's authorized representative shall provide written statement attesting that Applicator has been instructed on proper preparation, mixing and application procedures for coatings specified.
   2. Contractor and applicators shall have minimum of 10 years experience in application of similar products on similar project. Provide references for minimum of three different projects completed in last 5 years with similar scope of work. Include name and address of project, size of project in value (painting) and contact person.

C. Miscellaneous:
   1. Furnish paint through one manufacturer unless noted otherwise.

2. Coating used in all corridors and stairways shall meet requirements of NFPA 101 and ASTM E84.

D. Deviation from specified mil thickness or product type is not allowed without written authorization of Engineer.

E. Material may not be thinned unless approved, in writing, by paint manufacturer's authorized representative.

1.3 DEFINITIONS

A. Installer or Applicator: Installer or applicator is the person actually installing or applying the product in the field at the Project site.
   1. Installer or applicator are synonymous.

B. Approved Factory Finish: Finish on a product in compliance with the finish specified in the section where the product is specified.

C. Corrosive Environment: Immersion in, or not more than 6 IN above, or subject to frequent condensation, spillage or splash of a corrosive material such as water, wastewater, or chemical solution; or chronic exposure to corrosive, caustic or acidic agent, chemicals, chemical fumes, chemical mixture, or solutions with pH range of 5 - 9.

D. Highly Corrosive Environment: Immersion in, or not more than 6 IN above, or subject to frequent condensation, spillage or splash of a corrosive material such as water, wastewater, or chemical solution; or chronic exposure to corrosive, caustic or acidic agent, chemicals, chemical fumes, chemical mixture, or solutions with pH range below 5 or above 9.

E. Exposed Exterior Surface: Surface which is exposed to weather but not necessarily exposed to view as well as surface exposed to view.

F. Finished Room or Space: One that has finish called for on Room Finish Schedule or is indicated, on Drawings, to be painted.

G. Paint includes fillers, primers, sealers, emulsions, oils, alkyds, latex, enamels, thinners, stains, epoxies, vinyls, chlorinated rubbers, urethanes, shellacs, varnishes, and any other applied coating specified within this Section.

H. Surface Hidden from View: Surfaces such as those within pipe chases, and between top side of ceilings (including drop-in tile ceilings) and underside of floor or roof structure above.

I. VOC: Volatile Organic Compounds.

J. Water level for purposes of painting is: See Drawings.

1.4 SUBMITTALS

A. Manufacturer's statement regarding Applicator instruction on product use.

B. Contractor and applicator experience qualifications.

C. Manufacturer's recommendation for universal barrier coat.

D. Shop Drawings:
   1. See Section 01340.
   2. Product technical data including:
      a. Acknowledgement that products submitted meet requirements of standards referenced.
      b. Manufacturer's application instructions.
      c. Manufacturer's surface preparation instructions.
      d. If products being used are manufactured by Company other than listed in Article 2.2, provide complete individual data sheet comparison of proposed products with specified products including application procedure, coverage rates and verification that product is designed for intended use.

e. Contractor's written plan of action for containing airborne particles created by blasting operation and location of disposal of spent contaminated blasting media.
f. Coating manufacturer's recommendation on abrasive blasting.

E. Samples:
1. Manufacturer's full line of colors for Engineer's color selection.
2. After initial color selection by Engineer provide two 3 x 5 IN samples of each color selected.

F. Miscellaneous Submittals:
1. See Section 01340.
2. Approval of application equipment.
3. Applicator's daily record when requested by Engineer.

1.5 DELIVERY, STORAGE, AND HANDLING

A. Deliver in original containers, labeled as follows:
1. Name or type number of material.
2. Manufacturer's name and item stock number.
3. Contents, by volume, of major constituents.
4. Warning labels.
5. VOC content.

PART 2 - PRODUCTS

2.1 ACCEPTABLE MANUFACTURERS

A. Subject to compliance with the Contract Documents, only the following manufacturers are acceptable:
1. Tnemec.
2. PPG High Performance Coatings
3. ICI Devoe.
4. Valspar Corp.
5. Carboline Protective Coatings.
6. Sherwin Williams.
7. Dampney Company, Inc.

2.2 MATERIALS

A. All materials used must contain not more than 2.8 LBS/GAL VOC.

B. For unspecified materials such as thinner, provide manufacturer's recommended products.

C. Paint Systems - General:
1. P=prime coat. F1, F2 . . . Fn = first finish coat,
second finish coat . . … . nth finish coat, color as selected by Engineer.
2. If two finish coats of same material are required, Contractor may, at his option and by written approval from paint manufacturer, apply one coat equal to mil thickness of two coats specified.

D. Products specified are manufactured by Tnemec, unless otherwise noted.

E. Coatings used in contact with potable water must be NSF 61 approved.

F. Paint Systems:
1. System #1 Polyamidoamine Epoxy Primer with Polyamidoamine Epoxy Finish Coat.
a. Prime Coat:
1) P1: 1 coat, 2.0 to 3.0 mils, Series N69 Hi-Build Epoxoline II Polyamidoamine Epoxy Coating.
b. Finish Coat:

1) F1: 1 coat, 2.0 to 3.0 mils, Series N69 Hi-Build Epoxoline II Polyamidoamine Epoxy Coating.

c. Total DFT: 4.0 to 6.0 mils.

2. System #2 Polyamidoamine Epoxy Primer with Polyamidoamine Epoxy Finish Coat.
   a. Prime Coat:
      1) P1: 1 coat, 3.0 to 5.0 mils, Series N69 Hi-Build Epoxoline II Polyamidoamine Epoxy Coating.
   b. Finish Coats:
      1) F1: 1 coat, 3.0 to 5.0 mils, Series N69 Hi-Build Epoxoline II Polyamidoamine Epoxy Coating.
   c. Total DFT: 6.0 to 10.0 mils.
3. System #3 Polyamidoamine Epoxy Primer with Polyamidoamine Epoxy Finish Coat.
   a. Prime Coat:
      1) P1: 1 coat, 4.0 to 6.0 mils, Series N69 Hi-Build Epoxoline II Polyamidoamine Epoxy Coating.
   b. Finish Coats:
      1) F1: 1 coat, 4.0 to 6.0 mils, Series N69 Hi-Build Epoxoline II Polyamidoamine Epoxy Coating.
   c. Total DFT: 8.0 to 12.0 mils.
4. System #4 Polyamidoamine Epoxy Primer with Polyamidoamine Epoxy Intermediate Coat and Acrylic Polyurethane Finish Coat.
   a. Prime Coat:
      1) P1: 1 coat, 3.0 to 5.0 mils, Series N69 Hi-Build Epoxoline II Polyamidoamine Epoxy Coating.
   b. Intermediate Coat:
      1) I1: 1 coat, 3.0 to 5.0 mils, Series N69 Hi-Build Epoxoline II Polyamidoamine Epoxy Coating.
   c. Finish Coat:
      1) F1: 1 coat, 3.0 to 5.0 mils, Series 1074U Endura-Shield High-Build Acrylic Polyurethane Coating.
   d. Total DFT: 9.0 to 15.0 mils.
5. System #5 Polyamidoamine Epoxy Primer with Acrylic Polyurethane Finish Coat.
   a. Prime Coat:
      1) P1: 1 coat, 4.0 to 6.0 mils, Series N69 Hi-Build Epoxoline II Polyamidoamine Epoxy Coating.
   b. Finish Coat:
      1) F1: 1 coat, 2.0 to 5.0 mils, Series 1074U Endura-Shield High-Build Acrylic Polyurethane Coating.
   c. Total DFT: 6.0 to 11.0 mils.
6. System #6 Polyamide Epoxy tie-coat with Polyamidoamine Epoxy Finish Coat.
   a. Prime Coat:
      1) P1: 1 coat, 3.0 to 5.0 mils, Series 27 Typoxy Epoxy Polyamide Coating.
   b. Finish Coat:
      1) F1 1 coat, 4.0 to 6.0 mils Series N69 Hi-Build Epoxoline II Polyamidoamine Epoxy Coating.
   c. Total DFT: 7.0 to 11.0 mils.
7. System #7 Polyamide Epoxy tie-coat with Acrylic Polyurethane Finish Coat.
   a. Prime Coat:
      1) P1: 1 coat, 3.0 to 5.0 mils, Series 27 Typoxy Epoxy Polyamide Coating.
   b. Finish Coat:
      1) F1: 1 coat, 3.0 to 5.0 mils, Series 1074U Endura-Shield High-Build Acrylic Polyurethane Coating.
   c. Total DFT: 6.0 to 10.0 mils.
8. System #8 Polyamidoamine Epoxy Primer with Polyamide Coal Tar Epoxy Finish Coat
   a. Prime Coat:

1) P1: 1 coat, 3.0 to 5.0 mils, Series N69 Hi-Build Epoxoline II Polyamidoamine Epoxy Coating.

b. Finish Coat:

1) F1: 1 coat, 14.0 to 20.0 mils, Series 46H-413 Hi-Build Tneme-Tar Polyamide Coal Tar Epoxy Coating.

c. Total DFT: 17.0 to 25.0 mils.

9. System #9 Zinc-Rich Urethane Primer with Polyamidoamine Epoxy Intermediate Coat and Polyamidoamine Epoxy Finish Coat

a. Prime Coat:

1) P1: 1 coat, 2.5 to 3.5 mils, Series 90-97 Tneme-Zinc Moisture-Cured Zinc-Rich Urethane Primer, or

2) P2: 1 coat, 2.5 to 3.5 mils, Series 91-H_2O Hydro-Zinc Moisture-Cured Zinc-Rich Primer.

b. Intermediate Coat:

1) I1: 1 coat, 2.0 to 3.0 mils, Series N69 Hi-Build Epoxoline II Polyamidoamine Epoxy Coating, or

2) I2: 1 coat, 2.0 to 3.0 mils, Series 27 Typoxy Epoxy Polyamide Coating.

c. Finish Coat:

1) F1: 1 coat, 3.0 to 5.0 mils, Series N69 Hi-Build Epoxoline II Polyamidoamine Epoxy Coating.

d. Total DFT: 7.5 to 11.5 mils.

10. System #10 Zinc-Rich Urethane Primer with a High Solids Epoxy Intermediate Coat and a High Solids Epoxy Finish Coat all meeting NSF Standard 61 for Potable Water Service.

a. Prime Coat:

1) P1: 1 coat, 2.5 to 3.5 mils, Series 91-H_2O Hydro-Zinc Moisture-Cured Zinc-Rich Primer.

b. Intermediate Coat:

1) I1: 1 coat, 4.0 to 6.0 mils, Series 140 Pota-Pox Plus High Solids Epoxy Coating.

c. Finish Coat:

1) F1: 1 coat, 4.0 to 6.0 mils, Series 140 Pota-Pox Plus High Solids Epoxy Coating.

d. Total DFT: 10.5 to 15.5 mils.

11. System #11 Zinc-Rich Urethane Primer with an Acrylic Polyurethane Intermediate Coat and a Fluoropolymer Polyurethane Finish Coat.

a. Prime Coat:

1) P1: 1 coat, 2.5 to 3.5 mils, Series 91-H_2O Hydro-Zinc Moisture-Cured Zinc-Rich Urethane Primer, or

2) P2, 1 coat, 2.5 to 3.5 mils, Series 90-97 Tneme-Zinc Moisture-Cured Zinc-Rich Urethane Primer.

b. Intermediate Coat:

1) I1: 1 coat, 2.0 to 3.0 mils, Series 1075U Endura-Shield High-Build Acrylic Polyurethane Coating.

c. Finish Coat:

1) F1: 1 coat, 2.0 to 3.0 mils, Series V700 HydroFlon Fluoropolymer Polyurethane Coating.

d. Total DFT: 6.5 to 9.5 mils.

12. System #12 Modified Polyamidoamine Epoxy Primer with Polyamidoamine Epoxy Finish Coat.

a. Prime Coat:

1) P1: 1 coat, 4.0 to 6.0 mils, Series 135 Chembuild Modified Polyamidoamine Epoxy Coating.

b. Finish Coat:

1) F1: 1 coat, 4.0 to 6.0 mils, Series N69 Hi-Build Epoxoline II Polyamidoamine Epoxy Coating, or

2) F2: 1 coat, 4.0 to 6.0 mils, Series 135 Chembuild Modified Polyamidoamine Epoxy Coating.

c. Total DFT: 8.0 to 12.0 mils.

13. System #13 Modified Polyamidoamine Epoxy Primer with Acrylic Polyurethane Finish Coat.
    a. Prime Coat:
        1) P1: 1 coat, 4.0 to 6.0 mils, Series 135 Chembuild Modified Polyamidoamine Epoxy Coating.
    b. Finish Coat:
        1) F1: 1 coat, 2.0 to 3.0 mils, Series 1074U Endura-Shield High-Build Acrylic Polyurethane Coating.
    c. Total DFT: 6.0 to 9.0 mils.
14. System #14 Cementitious Acrylic Filler with an Acrylate Elastomeric Intermediate Coat and an Acrylate Elastomeric Finish Coat.
    a. Prime Coat:
        1) P1: 1 coat, 60 to 80 FT^2/GAL Series 130 Envirofill Waterborne Cementitious Acrylic Filler.
    b. Intermediate Coat:
        1) I1: 1 coat, 4.0 to 8.0 mils, Series 156 Enviro-Crete Waterborne Acrylate Elastomeric Coating, or
        2) I2: 1 coat, 6.0 to 9.0 mils, Series 157 Enviro-Crete Waterborne Acrylate Elastomeric Coating.
    c. Finish Coat:
        1) F1: 1 coat, 4.0 to 8.0 mils, Series 156 Enviro-Crete Waterborne Acrylate Elastomeric Coating, or
        2) 1 coat, 4.0 to 8.0 mils, Series 156 Enviro-Crete Waterborne Acrylate Elastomeric Coating.
    d. Total DFT:
        1) 8.0 to 16.0 mils plus filler, or
        2) 12.0 to 18.0 mils plus filler.
15. System #15 Cementitious Acrylic Filler with an Acrylic Epoxy Intermediate Coat and an Acrylic Epoxy Finish Coat.
    a. Prime Coat:
        1) P1: 1 coat, 60 to 80 FT^2/GAL Series 130 Envirofill Waterborne Cementitious Acrylic Filler.
    b. Intermediate Coat:
        1) I1: 1 coat, 4.0 to 6.0 mils, Series 114 H.B. Tneme-Tufcoat Waterborne Acrylic Epoxy Coating.
    c. Finish Coat:
        1) F1: 1 coat, 4.0 to 6.0 mils, Series 114 H.B. Tneme-Tufcoat Waterborne Acrylic Epoxy Coating.
    d. Total DFT: 8.0 to 12.0 mils plus filler.
16. System #16 Modified Polyamine Epoxy Primer with a Polyamidoamine Epoxy Intermediate Coat and a Polyamidoamine Epoxy Finish Coat all meeting NSF Standard 61 for Potable Water Service.
    a. Prime Coat:
        1) P1: 1 coat as needed to fill voids and surface imperfections: Series 215 Surfacing Epoxy Modified Polyamine Epoxy filler and surfacer.
    b. Intermediate Coat:
        1) I1: 1 coat, 6.0 to 8.0 mils, Series N140 Pota-Pox Plus Polyamidoamine Epoxy Coating.
    c. Finish Coat:
        1) F1: 1 coat, 6.0 to 8.0 mils, Series N140 Pota-Pox Plus Polyamidoamine Epoxy Coating.
    d. Total DFT: 12.0 to 16.0 mils plus filler/surfacer.
17. System #17 Zinc-Rich Urethane Primer
    a. Prime Coat:

1) P1: 1 coat, 2.5 to 3.5 mils, Series 90-97 Tneme-Zinc Moisture-Cured Zinc-Rich Urethane Primer, or
2) P2: 1 coat, 2.5 to 3.5 mils, Series 91-H_2O Hydro-Zinc Moisture-Cured Zinc-Rich Primer.

18. System #18 Epoxy Modified Mortar Filler with a Fiber Reinforced Modified Polyamine Epoxy Topcoat
    a. Prime Coat:
        1) P1: Patch, fill voids and bugholes and provide a 1/32 IN to ¼ IN thick smooth surface for top coating, Series 218 MortarClad Epoxy Modified Mortar.
    b. Finish Coat:
        1) F1: 1 or 2 coats, 50 to 125 mils DFT, Series 436 Perma-Shield FR Fiber-Reinforced Modified Polyamine Epoxy.
19. System #19 Polyamidoamine Epoxy Primer
    a. Prime Coat:
        1) P1: 1 coat, 2.0 to 4.0 mils, Series N69 Hi-Build Epoxoline II Polyamidoamine Epoxy Coating.
20. System #20 Acrylic Polymer Primer with an Acrylic Polymer Finish Coat.
    a. Prime Coat:
        1) P1: 1 coat, 2.0 to 3.0 mils, Series 1028 Enduratone High Dispersion Pure Acrylic Polymer Coating.
    b. Finish Coat:
        1) F1: 1 coat, 2.0 to 3.0 mils, Series 1028 Enduratone High Dispersion Pure Acrylic Polymer Coating.
    c. Total DFT: 4.0 to 6.0 mils.
21. System #21 Multi-Surface Waterborne Acrylic
    a. Finish Coat:
        1) F1: 1 coat, 1.5 to 2.0 mils, Sherwin Williams Pro Industrial Multi-Surface Acrylic B66-500 Series.

PART 3 - EXECUTION

3.1 ITEMS TO BE PAINTED

A. Exposed Exterior Surfaces including:
    1. Equipment supports, equipment pads, pipe supports.
    2. Piping, valves, fittings, and hydrants except when covered by pipe jacketing and supports.
    3. Miscellaneous ferrous metal surfaces.
    4. Steel pipe bollards.
    5. Structural steel.

B. Surfaces in Areas Not Considered Finished:
    1. Paint following surfaces in areas not considered as finished area:
        a. Piping, valves, fittings, and hydrants except when covered by pipe jacketing and supports.
        b. Structural steel, steel trusses (including bridging) and steel joists (including bridging).
        c. Miscellaneous ferrous metal surfaces.

C. New and/or Existing Equipment:
    1. Paint new and/or existing equipment, except:
        a. Where specified elsewhere in the Contract Documents.
        b. Where indicated on the drawings.

3.2 ITEMS NOT TO BE PAINTED

A. General: Do not paint items listed in Article 3.2 unless specifically noted in the Contract Documents to be painted.

B. Items with Approved Factory Finish.

C. Electrical Equipment:
   1. Do not field paint certain items of electrical equipment as listed in Section 11005 except where painting is specifically stated elsewhere in these Contract Documents, or where the equipment is subject to a corrosive environment. The list of equipment includes specific types of equipment with Approved Factory Finishes.

D. Surfaces Hidden from View except when in a corrosive or highly corrosive area, including:
   1. When not in a corrosive or highly corrosive area:
      a. Piping.
      b. Conduit.
      c. Ducts.
      d. Insulation.
      e. Note: (Manufacturer's standard coatings, if any, may remain).

E. Other Items:
   1. Stainless steel surfaces except:
      a. Piping.
      b. Banding as required to identify piping.
   2. Aluminum surfaces except:
      a. Where in contact with concrete.
      b. Where in contact with dissimilar metals.
   3. Fiberglass surfaces except:
      a. Fiberglass piping.
      b. Piping supports.
   4. Interior of pipe, ductwork, and conduits.
   5. Moving parts of mechanical and electrical units where painting would interfere with the operation of the unit.
   6. Code labels and equipment identification and rating plates.
   7. Structural steel or steel deck required to be fireproofed.
   8. Steel deck.
   9. Contact surfaces of friction-type connections.
   10. Galvanized steel items.

3.3 SCHEDULE OF ITEMS TO BE PAINTED AND PAINTING SYSTEMS

	Painting System Number
A. Concrete:	
1. Interior cast-in-place and precast surfaces (other than prefinished panels) including equipment bases, pads, walls, beams, slabs, columns, ceilings, pedestals, pilasters, etc.	15
2. Exterior cast-in-place and precast surfaces (other than prefinished panels) as indicated on the drawings to be painted.	14
3. Sanitary Sewer service (interior of manholes, lift station wet wells, etc.)	18
4. Immersion service (non-potable water)	8
5. Immersion service (potable water)	16
6. Below grade when indicated on the drawings or in other specifications to be coated	8
B. Structural Steel:	
1. Factory or fabricator applied primer	17
2. Interior corrosive or highly corrosive environment	3
3. Interior non-corrosive dry environment	2

4. Exterior corrosive or highly corrosive environment	4
5. Exterior non-corrosive environment	5
6. Immersion (non-potable water)	9
7. Immersion (potable water)	10
8. Below grade	8
C. Steel, uncoated cast iron, and uncoated ductile iron pipe, valves and fittings:	
1. Interior	2
2. Exterior exposed	4
3. Immersion (non-potable water)	9
4. Immersion (potable water)	10
5. Below grade	8
D. PVC, PE, FRP and CPVC pipe, valves and fittings	
1. Interior exposed	1
2. Exterior exposed	5
E. Bituminous coated cast or ductile iron pipe, valves and fittings	
1. Interior	12
2. Exterior exposed	13
F. Steel, cast iron, or ductile iron equipment with factory applied primer, or other paint	
1. Interior	6
2. Exterior	7
G. Hollow metal doors, door frames, and window frames with factory applied primer or other paint	
1. Interior	6
2. Exterior	7
H. Steel water storage tank and appurtenances including structural steel and exposed piping	
1. Interior	10
2. Exterior	11
I. Miscellaneous non-structural ferrous metals	
1. Interior	2
2. Exterior exposed	5
3. Immersion (non-potable water)	8
4. Immersion (potable water)	16
5. Below grade	8
J. Galvanized steel (where indicated to painted)	
1. Interior	1
2. Exterior exposed	5
3. Immersion (non-potable water)	2
4. Touch up damaged galvanizing prior to coating or on surfaces not subject to additional coatings	17
K. Plastics	
1. Interior	1
2. Exterior exposed	5
3. Immersion (non-potable water)	2
4. Immersion (potable water)	16
L. Aluminum in contact with concrete or dissimilar metals	19

M. Pipe and duct Insulation	20
N. Bronze, Brass, and Cast Iron components of Reclaimed Water System designated to be field painted Purple	21

3.4 PREPARATION

A. General:
   1. Prepare surfaces to be painted in accordance with coating manufacturer's instructions and this Section unless noted otherwise in the Specification.
   2. Remove all dust, grease, oil, compounds, dirt and other foreign matter which would prevent bonding of coating to surface.

B. Protection:
   1. Protect surrounding surfaces not to be coated.
   2. Remove and protect hardware, accessories, plates, fixtures, finished work, and similar items; or provide ample in-place protection.

C. Prepare and Paint Before Assembly: Where component is subject to corrosive or highly corrosive environment, prepare and paint, before assembly, all surfaces which may be subject to environment which are inaccessible after assembly.

D. Wood:
   1. Sandpaper smooth, then dust.
   2. Seal all knots, pitch and resinous sapwood after priming coat has dried.
   3. Putty nail holes and minor defects to match wood color.

E. Ferrous Metal:
   1. Prepare ductile iron pipe in accordance with pipe manufacturer's recommendations and AWWA.
   2. Complete fabrication, welding or burning before beginning surface preparation.
      a. Chip or grind off flux, spatter, slag or other laminations left from welding.
      b. Remove mill scale.
      c. Grind smooth rough welds and other sharp projections.
   3. Solvent clean in accordance with SSPC SP-1 all surfaces scheduled to receive additional SSPC surface preparation.
   4. Surfaces subject to corrosive or highly corrosive environment and all surfaces subject to immersion service:
      a. Near-white blast clean in accordance with SSPC SP-10.
   5. Interior and exterior surfaces not subject to corrosive or highly corrosive environment (including structural steel surfaces):
      a. Commercial blast clean in accordance with SSPC SP-6.
   6. Surfaces subject to high temperatures.
      a. Heat in excess of 600 DegF: SSPC-SP10.
      b. Heat in excess of 200 DegF but less than 600 DegF: SSPC-SP6.
   7. Surfaces of steel joists and steel trusses:
      a. Power tool or hand clean in accordance with SSPC SP-2 or SP-3.
   8. Steel surfaces scheduled to receive paint system No. 24:
      a. White metal blast in accordance with SSPC SP-5.
   9. Restore surface of field welds and adjacent areas to original surface preparation.
   10. All surfaces of steel lintels used in wall construction shall be completely painted with both prime and finish coats prior to placing in wall.

F. Hollow Metal:
   1. Solvent clean in accordance with SSPC SP-1.

G. Galvanized Metal:

1. Solvent clean in accordance with SSPC SP-1 followed by abrasive brush blast in accordance with SSPC SP-7 to provide 1 mil profile.
2. Repair damaged or uncoated areas of hot-dip galvanized metal in accordance with ASTM A780.

H. Gypsum Wallboard:
1. Repair minor irregularities left by finishers.
2. Avoid raising nap of paper face on gypsum wallboard.
3. Verify moisture content is less than 8 percent before painting.

I. Concrete:
1. Cure for minimum of 28 days.
2. Verify that concrete surfaces have been cleaned and that voids have been patch in accordance with Section 03002.
   a. Concrete surfaces shall be cleaned in accordance with ASTM D4258.
3. Mechanically abrade concrete surfaces in accordance ASTM D4259 as recommended by coating manufacturer.
4. Brush-off blast concrete surfaces in accordance with SSPC-SP-7 to provide profile recommended by coatings manufacturer.
5. Test pH of surface to be painted in accordance with ASTM D4262.
   a. If surface pH is not within coating manufacturer's required acceptable range, flush with clean water as required to bring pH within acceptable range.
   b. Retest pH until acceptable results are obtained.
6. Verify that moisture content of surface to be painted is within coating manufacturer's recommended acceptable limits.
   a. Test moisture content of surface to be coated in accordance with ASTM D4263.
   b. After remedial measures have been taken to lower or raise moisture content, retest surface until acceptable results are obtained.

J. Concrete Unit Masonry:
1. Cure for minimum of 28 days.
2. Remove all mortar spatters and protrusions.
3. Verify that concrete unit masonry surfaces have been cleaned in accordance with Section 04220 and ASTM D4261.
4. Test pH of surface to be painted in accordance with ASTM D4262.
   a. If surface pH is not within coating manufacturer's required acceptable range, flush surface with clean water as required to bring pH within acceptable limits.
   b. Retest pH until acceptable results are obtained.
5. Verify that moisture content of surface to be painted is within coating manufacturer's recommended acceptable limits.
   a. Test moisture content of surface to be coated in accordance with ASTM D4263.
   b. After remedial measures have been taken to lower or raise moisture content, retest surface until acceptable range is obtained.

K. Preparation by Abrasive Blasting:
1. All abrasive-blasted ferrous metal surfaces shall be inspected and approved in writing by NACE certified coatings inspector immediately prior to application of paint coatings.
   a. Inspection shall be performed to determine cleanliness and profile depth of blasted surfaces and to certify that surface has been prepared in accordance with these Specifications.
2. Schedule the abrasive blasting operation so blasted surfaces will not be wet after blasting and before painting.
3. Perform additional blasting and cleaning as required to achieve surface preparation required. Prior to painting, reblast surfaces allowed to set overnight or surfaces that show rust bloom.
   a. Surfaces allowed to set overnight or surfaces which show rust bloom prior to painting shall be reinspected and approved by NACE certified coatings inspector prior to paint application.

4. Profile depth of blasted surface: Not less than 1 mil or greater than 2 mils unless required otherwise by coating manufacturer.
5. Provide compressed air for blasting that is free of water and oil. Provide accessible separators and traps.
6. Confine blast abrasives to area being blasted.
   a. Provide shields of polyethylene sheeting or other such barriers to confine blast material.
   b. Plug pipes, holes, or openings before blasting and keep plugged until blast operation is complete and residue is removed.
7. Protect nameplates, valve stems, rotating equipment, motors and other items that may be damaged from blasting.
8. Reblast surfaces not meeting requirements of these Specifications.
9. Abrasive blasting media may be recovered, cleaned and reused providing Contractor submits, for Engineer's review, a comprehensive recovery plan outlining all procedures and equipment proposed in reclamation process.
10. Properly dispose of blasting material contaminated with debris from blasting operation not scheduled to be reused.

L. All Plastic Surfaces and Non-Ferrous Surfaces Except Galvanized Steel:
   1. Sand using 80-100 grit sandpaper to scarify surfaces.

3.5 APPLICATION

A. General:
   1. Thin, mix and apply coatings by brush, roller, or spray in accordance with manufacturer's installation instructions.
      a. Application equipment must be inspected and approved in writing by coating manufacturer.
   2. Temperature and weather conditions:
      a. Do not paint surfaces when surface temperature is below 50 DegF unless product has been formulated specifically for low temperature application or approved in writing by Engineer and paint manufacturer's authorized representative.
      b. Avoid painting surfaces exposed to hot sun.
      c. Do not paint on damp surfaces.
   3. Immediately after surface has been inspected , apply structural steel and miscellaneous steel prime coat in the factory.
      a. Finish coats shall be applied in the field.
      b. Prime coat referred to here is prime coat as indicated in this Specification. Structural and miscellaneous steel: prime coating applied in factory (shop) as part of Fabricator's standard rust inhibiting and protection coating is not acceptable as replacement for specified prime coating.
   4. Provide complete coverage to mil thickness specified.
      a. Thickness specified is dry mil thickness.
      b. All paint systems are "to cover." In situations of discrepancy between manufacturer's square footage coverage rates and mil thickness, mil thickness requirements govern.
      c. When color or undercoats show through, apply additional coats until paint film is of uniform finish and color.
   5. If so directed by Engineer, do not apply consecutive coats until Engineer has had an opportunity to observe and approve previous coats.
   6. Apply materials under adequate illumination.
   7. Evenly spread to provide full, smooth coverage.
   8. Work each application of material into corners, crevices, joints, and other difficult to work areas.
   9. Avoid degradation and contamination of blasted surfaces and avoid intercoat contamination.
      a. Clean contaminated surfaces before applying next coat.
   10. Smooth out runs or sags immediately, or remove and recoat entire surface.
   11. Allow preceding coats to dry before recoating.

a. Recoat within time limits specified by coating manufacturer.
b. If recoat time limits have expired reprepare surface in accordance with coating manufacturer's printed recommendations.

12. Allow coated surfaces to cure prior to allowing traffic or other work to proceed.
13. Coat all aluminum in contact with dissimilar materials.
14. When coating rough surfaces which cannot be backrolled sufficiently, hand brush coating to work into all recesses.
15. Backroll concrete and masonry and gypsum board and plaster surfaces with a roller if paint coatings are spray applied.

B. Prime Coat Application:
1. Prime all surfaces indicated to be painted. Apply prime coat in accordance with coating manufacturer's written instructions and as written in this Section.
2. Ensure field-applied coatings are compatible with factory-applied coatings. Ensure new coatings applied over existing coatings are compatible.
   a. Employ services of coating manufacturer's qualified technical representative.
      1) Certify thru material data sheets.
      2) Perform test patch.
   b. If field-applied coating is found to be not compatible, require the coating manufacturer's technical representative to recommend, in writing, product to be used as barrier coat, thickness to be applied, surface preparation and method of application.
   c. At Contractor's option, coatings may be removed, surface reprepared, and new coating applied using appropriate paint system listed in paragraph 2.2 E.
      1) All damage to surface as result of coating removal shall be repaired to original condition or better by Contractor at no additional cost to Owner.
3. Prime ferrous metals embedded in concrete to minimum of 1 IN below exposed surfaces.
4. Back prime all wood scheduled to be painted, prior to installation.
5. Apply zinc-rich primers while under continuous agitation.
6. Ensure abrasive blasting operation does not result in embedment of abrasive particles in paint film.
7. Brush or spray bolts, welds, edges and difficult access areas with primer prior to primer application over entire surface.
8. When surface is scheduled to receive painted finish, completely fill all pores of concrete block using block filler specified.
9. Touch up damaged primer coats prior to applying finish coats. Restore primed surface equal to surface before damage.

C. Finish Coat Application:
1. Apply finish coats in accordance with coating manufacturer's written instructions and in accordance with this Section.
2. Touch up damaged finish coats using same application method and same material specified for finish coat. Prepare damaged area in accordance with Article 3.4.

3.6 COLOR CODING

A. Color and band piping in accordance with Article 3.9 of this Section.
1. Band piping using maximum of three different colors at 20 FT maximum centers.
2. Place bands:
   a. Along continuous lines.
   b. At changes in direction.
   c. At changes of elevation.
   d. On both sides of an obstruction (i.e., wall, ceiling) that painted item passes through.
3. Band width for individual colors (pipe diameter measured to outside of insulation, if applicable):
   a. Piping up to 8 IN DIA: 2 IN minimum.
   b. Piping greater than 8 IN up to 24 IN DIA: 4 IN minimum.
   c. Piping greater than 24 IN up to 48 IN DIA: 6 IN minimum.

d. Piping greater than 48 IN DIA: 8 IN minimum.

B. Color coding for safety: Use colors conforming to ANSI Z535.1.

C. Reclaimed water Purple or Lavender: Pantone 522C.

3.7 FIELD QUALITY CONTROL

A. Maintain daily record showing:
1. Start date and time of work in each area and weather conditions.
2. Date and time of application for each coat applied.
3. Dry film thickness measurements taken for each day that coatings are applied.
4. Moisture content and surface temperature of substrate prior to each coat.
5. Provisions utilized to maintain temperature and humidity of work area within manufacturer's recommended ranges.

B. Measure wet coating with wet film thickness gages.

C. Measure coating dry film thickness in accordance with SSPC PA-2 using Mikrotest gage calibrated against National Bureau of Standards "Certified Coating Thickness Calibration Standards."
1. Engineer may measure coating thickness at any time during project to assure conformance with Specifications.

D. Measure surface temperature of items to be painted with surface temperature gage specifically designed for such.

E. Measure substrate humidity with humidity gage specifically designed for such.

F. Use approved holiday detection equipment to check for discontinuities in coating coverage and correct any that are identified.
a. Structural steel, and miscellaneous conductive metal substrates in exterior, buried, corrosive, or highly corrosive areas: Check for discontinuity per ASTM D5162.
b. Concrete Substrates in exterior, buried, corrosive, or highly corrosive areas: Check for discontinuity per ASTM D4787.
c. Buried ferrous metal pipelines coated in accordance with this section: Check for discontinuity per ASTM G62.

G. Provide wet paint signs.

3.8 CLEANING

A. Clean paint spattered surfaces. Use care not to damage finished surfaces.

B. Upon completion of painting, replace hardware, accessories, plates, fixtures, and similar items.

C. Remove surplus materials, scaffolding, and debris. Leave areas broom clean.

3.9 SCHEDULE

A. Piping and Pipe Banding Color Schedule (Colors based on Tnemec):
1. As Indicated on Drawings.

END OF SECTION

City of Boerne

DIVISION 16

SECTION 16100

CITY OF BOERNE UNDERGROUND ELECTRIC DISTRIBUTION

PART 1 - GENERAL

1.1 SUMMARY

A. Section includes:
1. Requirements for the construction of underground electric distribution systems for subdivisions in the City of Boerne electric service territory

B. Related Sections include but are not limited to:
1. Division 0 - Bidding Requirements, Contract Forms, and Conditions of the Contract.
2. Division 1 - General Requirements.
3. Section 02110 - Site Clearing.
4. Section 02221 - Trenching, Backfilling, and Compacting for Utilities.
5. Section 02224 - Pipeline Undercrossings.
6. Section 02260 - Topsoiling and Finished Grading.
7. Section 03002 - Concrete.

C. City of Boerne responsibilities:
1. Provide Inspections.
2. Supply and Install riser pole(s).
3. Supply and install meters.

D. Responsibilities of the City of Boerne at Owner's/Developer's Expense (City of Boerne may contract for any or all work listed herein or Owner/Developer may contract for portions of work listed herein with City of Boerne approval):
1. Install risers and stand off brackets.
2. Supply and set transformers.
3. Supply and Install primary cable.
4. Supply and Install secondary cable.
5. Supply and Install meter pedestals and/or secondary enclosures.
6. Supply and Install all primary connectors (elbows, etc).
7. Make all transformer connections.
8. Supply and Install all secondary connectors.
9. Supply and Install ground connectors.
10. Test primary conductors.
11. Supply and Install all street light poles, fixtures and connections.

E. Contractor Responsibilities:
1. Excavation of trenches for electrical primary and secondary cable trenches, trenching for street light circuit conduits, and to include trenching for cable television and telephone.
2. Supply and Install trench bedding material and backfill material.
3. Supply and Install primary conduit.
4. Supply and Install all equipment pads.
5. Supply and Install secondary conduit.
6. Supply and Install ground rods.
7. Supply and Install conduits for CATV and Telephone.
8. Backfill trenches.

F. Owner's/Developer's responsibilities:
1. Design street lights and other lighting to conform with the City of Boerne Lighting Ordinance.
2. Furnish all engineering services.
3. Construction of subdivision infrastructure.
4. Obtain contractors, bidding process, and construction coordination.

G. Materials furnished by the City of Boerne at the Owner/Developer's expense (Owner/Developer may provide some items with approval from the City of Boerne):
1. Primary electrical cables.
2. Secondary electrical cables.
3. Street Light wiring.
4. Primary elbows. (usually 25 kV, 200 amp)
5. All Secondary connectors.
6. Cable accessory Sealing Kit - Manuf: 3M #8452
7. Meter Pedestals.
8. Feed thru Primary elbows.
9. Primary Elbow Lightning arresters.
10. Parking stand Lightning arresters.
11. Streetlights.
12. Safety Signs – "Two-Way Feed", "Danger", "Caution", etc.
13. Transformers.
14. All other appurtenances and hardware required to complete system installation.

1.2 QUALITY ASSURANCE

A. All construction must conform to the City of Boerne electrical construction practices and codes, National Electric Safety Code and the National Electric Code.

B. Referenced Standards:
1. American Society for Testing and Materials (ASTM):
   a. D1784, Standard Specification for Rigid Poly(Vinyl Chloride) (PVC) Compounds and Chlorinated Poly(Vinyl Chloride) (CPVC) Compounds.
   b. D2564, Solvent Cements for (PVC) Plastic Pipe, Tubing, and Fittings.
   c. F512, Standard Specification for Smooth-Wall Poly(Vinyl Chloride) (PVC) Conduit and Fittings for Underground Installation.
2. National Electrical Manufacturers Association (NEMA):
   a. TC 2, Electrical Plastic Tubing (EPT) and Conduit (EPC-40 and EPC-80).
   b. TC 3, PVC Fittings for Use with Rigid PVC Conduit and Tubing.
3. Underwriters Laboratories, Inc. (UL):
   a. 467, Grounding and Bonding Equipment.
   b. 514B, Fittings for Cable and Conduit.
   c. 651, Schedule 40 and 80 Rigid PVC Conduit.

1.3 SUBMITTALS

A. Shop Drawings:
1. See Section 01340.
2. Provide manufacturer's technical information on products to be used, including product descriptive bulletin.
3. Include data sheets that include manufacturer's name and product model number. Clearly identify all optional accessories.
4. Acknowledgement that products are UL or ETL listed or is constructed utilizing UL or ETL recognized components.
5. Manufacturer's delivery, storage, handling and installation instructions.
6. Product installation details.

1.4 DELIVERY STORAGE AND HANDLING

A. All material and equipment to be used in construction shall be stored so as to be protected from deteriorating effects of the elements.

B. If outdoor storage cannot be avoided, the material and equipment shall be stacked on supports well above the ground line and protected from the elements as appropriate, and with due regard to public safety.

PART 2 - PRODUCTS

2.1 GROUND RODS

A. Ground Rods:
1. UL 467.
2. Up to 250 KVA: 5/8 IN x 8 FT.
3. Greater than 250 KVA: 3/4 IN x 10 FT.
4. Copperclad:
    a. Heavy uniform coating of electrolytic copper molecularly bonded to a rigid steel core.
    b. Corrosion resistant bond between the copper and steel.
    c. Hard drawn for a scar-resistant surface.

2.2 EQUIPMENT PADS

A. Precast Concrete Pad for transformers
1. approved vendor is Block Creek Concrete Products in Comfort, TX.

B. Precast Concrete Pad for Meter Pedestals
1. approved vendor is Block Creek Concrete Products in Comfort, TX.

C. Precast Concrete Pad for Junction Boxes
1. approved vendor is Block Creek Concrete Products in Comfort, TX.

2.3 RIGID NON-METALLIC CONDUIT

A. ASTM F512: Schedules 40 (PVC-40) and 80 (PVC-80):
1. Polyvinyl-chloride (PVC) plastic compound which meets, as a minimum, ASTM D1784 cell classification PVC 12233-A, B, or C.
2. Rated for direct sunlight exposure.
3. Fire retardant and low smoke emission.
4. Shall be suitable for use with 90 DegC wire and shall be marked "maximum 90 DegC".
5. Standards: ASTM D1784, NEMA TC 2, UL 651.

B. Fittings for Use with Rigid Non-Metallic Conduit:
1. Coupling and adapters shall be of the same material, thickness, and construction as the conduits with which they are used.
2. Standards: UL 651, UL 514B, NEMA TC 3.
3. Solvent cement for welding fittings shall be supplied by the same manufacturer as the conduit and fittings.
    a. Standard: ASTM D2564.
4. Long sweep elbows: minimum radius: 24 IN.

2.4 STREET LIGHTS

A. Antique style:
1. Luminaires:
    a. Prismatic Acorn: Granville as manufactured by Holophane.
    b. 175 W Metal halide lamp.
    c. 120 Volt.
    d. Leaf Casting.
    e. Dark Green.
    f. Lunar cut-off optics: Type II, III or V as appropriate.
    g. No trim, no finial.
    h. Photocontrol: 120V mounted in access cover.
2. Alternate LED Luminaire:
    a. Use only with prior written approval of the City of Boerne.
    b. Prismatic Acorn: Granville as manufactured by Holophane.
    c. LED lamps.

d. 116 W LED driver.
e. 120 Volt.
f. Leaf Casting.
g. Dark Green.
h. Classic optics: Type II, III or V as appropriate.
i. No trim, no finial.
j. Photocontrol: 120V mounted in access cover.

3. Post:
   a. Cast Aluminum Post: Wadsworth series by Holophane.
   b. 13 FT – 7 IN Tall with 17 IN base.
   c. Cast aluminum with Dark Green finish.
   d. 3 IN OD by 3 IN high tenon.

B. Cobra Head style:
1. Luminaire:
   a. Full Cut-off cobrahead style by Streetworks.
   b. Flat glass luminaire.
   c. 100 Watt High Pressure Sodium.
   d. Reactor Ballast, 120 Volt.
   e. Type II or III cut-off optics as appropriate.
   f. White or Black finish to match arm and pole.
   g. NEMA receptacle photocontrol.
   h. Streetworks Model No. OVH10SR22D4.
   i. Or approved Equal.
2. Alternate LED Luminaire:
   a. Use only with prior written approval of the City of Boerne.
   b. Full Cut-off cobrahead style by Streetworks.
   c. 3 or 4 light bars of LED Lamps.
   d. 120 Volt electronic LED driver.
   e. Type II, III, IV, and similar with spill control optics as appropriate to lighting design.
   f. White or Black finish to match arm and pole.
   g. NEMA receptacle photocontrol.
   h. Streetworks Model No. OVHA04LEDEU or OVHA03LEDEU.
   i. Or approved Equal.
3. Post:
   a. Wound Fiberglass Pole by Shakespeare Composite Structures.
   b. Round Tapered, direct bury pole.
   c. 30 FT tall pole, 25 FT mounting height.
   d. Grey or Black.
   e. Shakespeare Model No. BS30-4985-BG25.
   f. Or approved equal.
4. Arm:
   a. Aluminum Mast Arm by Shakespeare Composite Structures.
   b. Single, tapered arm with 2 3/8 IN OD tenon.
   c. Span: 68 IN, Rise: 24 IN.
   d. Color to match pole.
   e. Shakespeare Model No. OPAR-6H.
   f. Or approved equal.

2.5 ACCESSORIES

A. Color coding material for identifying cables.
1. Material: vinyl or polyester tape.
   a. Approved manufacturer's catalog numbers:
      1) W. H. Brady Co., Indoor/Outdoor Vinyl Tape, B-580.
      2) Seton, “Self-Laminating Wire Marker Labels” M7340.
      3) Panduit, LS4M “Industrial Labeling Tape”.

B. Underground warning tape:
   1. Material: Polyethylene with metallic core.
   2. Thickness: 3.5 mils.
   3. Tensile strength: 1750 psi.
   4. Size: 6 IN wide (minimum).
   5. Legend for Electric: Preprinted continuously.
      a. “CAUTION – ELECTRIC LINE BURIED BELOW”
      b. Black lettering on red background.
   6. Legend for Telephone and Cable TV: Preprinted continuously:
      a. “CAUTION – COMMUNICATIONS CABLES BURIED BELOW”
      b. Black lettering on orange background.

C. Trench backfill materials per Section 02221.

D. Measure/Pull Tape:
   1. Greenlee cat. no. 4437 or equal.
   2. Polyester tape with FT markings.
   3. Width: 3/4 IN.
   4. Breaking strength: 2500 LB.

E. Mandrel:
   1. Greenlee flexible mandrel or equal.
   2. Polyurethane discs with tapered profile.
   3. Pulling eyes at both ends.
   4. Sized for conduit installed.

PART 3 - EXECUTION

3.1 GENERAL

A. The City of Boerne reserves the right to halt construction when City of Boerne determines that weather or site conditions would have an adverse impact on the facilities being installed.

B. The Contractor shall be responsible for being aware of all other overhead and underground utilities to prevent conflicts with the other utilities.

3.2 TRENCH INSTALLATION

A. All trenching depths specified as measured from the final grade.

B. The routing shall be as shown on the construction plans and specifications unless conditions encountered are such that changes are necessary to accomplish the work. In such event, promptly notify the City of Boerne.

C. Exercise care to minimize the likelihood of water flow since this may cause trench damage and reduction in trench depth. If this occurs, clear the trench to the specified depth before installing the conduit(s).

D. All trenches shall follow straight lines between points as indicated on drawings. Secondary and service trenches shall extend in a straight line from takeoff points wherever possible.

E. Excavate the primary and secondary trenches as specified in the drawings.
   1. Excavate an 18-inch to 24-inch wide trench to the depth required to provide necessary clearances as shown in the drawings.
   2. Trenches shall be dug so that the bottom has a smooth grade.
   3. Remove large rocks, stones and gravel in excess of 1 inch from the bottom of the trench
   4. Place a 2 inch bed of "Red Poteet" sand in the bottom of the trench.
   5. Cover each layer (electrical, gas, and communication) with a minimum of 12 IN of the “Red Poteet” sand.

F. Arrange construction so that trenches are left open for the shortest practical time to avoid creating a hazard to the public and to minimize the likelihood of collapse of the trench due to other construction activity, rain, etc.

G. Contact the City of Boerne 24 hours in advance to coordinate inspections whenever inspections are required.
1. The City of Boerne will inspect all trenches for adequate depth before installation of conduit begins.
2. City of Boerne will inspect at each stage of conduit installation.
3. City of Boerne will inspect the electrical line conduit installation before covering.
4. City of Boerne will inspect the communication conduit installation before covering.
5. Any trenching covered before approval by the City of Boerne shall be re-excavated at the expense of the contractor.

3.3 CONDUIT INSTALLATION

A. Conduit
1. Install the primary and secondary electric cable conduits in accordance with the construction drawings. Install the CATV and Telephone conduits. Place the conduits in the trench immediately following excavation and placement of bedding sand.
2. Organize conduits according to plan schematics to avoid wiring that crosses within enclosures.
   a. Arrange conduits in transformers such that each phase is adjacent to the connection in the transformer.
   b. Arrange conduits in junction boxes such that the phases are grouped adjacent to the junction box connectors and organized by feed direction.
3. Install conduit to the depth and at locations specified in the trench detail, riser detail, and equipment detail drawings.
4. Install sweeping bends whenever possible to ease pulling of cable, but under no circumstances shall the radius of any bend be less than 24 inches.
   a. Torches or low fire bending of conduits will NOT be accepted, use appropriate warming tool for pipe bending.
   b. No more than 360 degrees of total bend (both vertical and horizontal) will be allowed in a single conduit run without a junction box.
   c. Maximum pulling distance between junction boxes shall be 500 FT. For primary conduit runs longer than 500 FT install midpoint junction boxes as needed to reduce maximum length to 500 FT.
5. Cap all conduit at all exposed ends to prevent the entrance of foreign matter and moisture into the conduit until the cable is installed.
   a. Keep conduits clean and free of dirt and other matter after installation.
   b. Place measure/pull tapes in all conduits installed.
6. Remove burrs or sharp projections on or in conduits that might injure the cable.
7. The City of Boerne will inspect all conduit installations before installation of the upper portion of bedding sand begins.

B. Backfill
1. The Developer shall provide backfill in accordance with the requirements as specified under Section 02221.
2. The initial trench backfill material shall be "Red Poteet" sand as specified for initial backfill in Section 02221, free from rock, gravel or other material that could damage the embedded conduit.
3. Place two (2) inches of clean bedding sand below the electrical conduit.
4. Extend the sand backfill to a minimum of twelve (12) inches above the electrical and/or communication cable conduit.
5. Native soil may be used as secondary backfill per Section 02221. Remove any rock, spoils or other trench excavation debris from the site.
6. Do not bury pieces of scrap cable or other material remaining after installation as a means of disposal.

7. Install the backfill as specified in the trench detail drawings.
8. Installing warning tape as specified in trench detail drawings.
9. Install additional backfill over the trench as necessary to restore the trench area to the level of the surrounding finish grade.
10. The City of Boerne will inspect the installation of the backfill material before and after the warning tape has been installed and before the installation of the upper portion of backfill material begins.
11. Mechanically compact all trenches.

C. Clean up all areas disturbed and return the ground to its original condition.

3.4 EQUIPMENT PAD INSTALLATION

A. The City of Boerne will install all transformers, load break junction boxes, meter pedestals, secondary enclosures, etc. on concrete pads provided and installed by the Contractor.

B. Position the pads on the lots as indicated on the construction drawings.
1. At adverse terrain locations of the development, provide grading required to place the transformer and meter pedestal pads level.
2. Install pads so that the top of the pad extends 2 IN above finished grade including turf.

C. Compact area beneath pad to provide a stable foundation for equipment pads. Compaction shall be in accordance with Section 02200.

D. Add Granular Fill as specified in Section 02200 to the site as necessary to provide a level installation of the pad at the specified grade and elevation.

E. Cut or fill the land around each pad to provide a level area around the pad for a minimum distance of 3 feet.
1. Mechanically compact all fill material for a distance of 3 feet from the transformer pad to prevent erosion and/or settlement.
2. Slope the soil in the immediate vicinity of the pad away from the pad.

3.5 PRIMARY AND SECONDARY CABLE INSTALLATION

A. The City of Boerne will install all primary cables.

B. Cable shall be handled carefully at all times to avoid damage, and shall not be dragged across the ground, fences or sharp projections. Care shall be exercised to avoid excessive bending of the cable. The ends of the cable shall be sealed at all times against moisture with suitable end caps. Where it is necessary to cut the cable, the ends shall be terminated or sealed immediately after the cutting operation.

C. The City of Boerne will tag all cables with permanent cable markers as shown on the cable schedule. All underground primary and secondary cables shall be marked with permanent weatherproof tags that indicate location of the terminal end. If more than one phase, the phase designation shall be included.

D. The "URD ELECTRICAL PLAN" is drawn to scale. However, it is the City of Boerne's sole responsibility to determine the amount of cable required for the project, including bends, stub ups, and waste.

E. City of Boerne shall leave at least 4 feet of primary cable at transformers and junction boxes for cable make-up. City of Boerne shall leave enough secondary cable at termination points to reach at least 12 inches above the top of the underground enclosure.

F. NO underground primary cable splices shall be allowed. All cable terminations shall be made above ground in the transformers.

G. Electrical cable shall be pulled directly from the reel into conduit and not laid out on the ground. The reel shall be supported so that it can turn easily without undue strain on the cable. Any cable with nicks or cuts in the jacket will be rejected. Talc or other lubricant may be used during pulling.

H. In placing primary cables, the stress applied while pulling into conduits or pulling operations shall not exceed the least of the following:
   1. Where a pulling eye is attached to the conductor, the maximum pulling strain in pounds shall not exceed .006 times the circular mil area for aluminum or .008 times the circular mil area for copper.
   2. Where a basket grip is placed over the cable, the pulling strain shall not exceed the lesser of (1) that calculated in "a." above or (2) 1000 pounds. The cable under the cable grip and 1 foot following it shall be severed and discarded after the pulling operation.
   3. In no case shall the maximum pulling tension exceed that recommended by the specific cable manufacturer.
   4. At bends, the maximum sidewall pressure recommended by the cable manufacturer shall not be exceeded.

I. Cable emerging from conduit on poles, vaults, or pads shall be secured prior to electrical termination so as not to experience bends tighter than a 24 IN radius.

J. At equipment locations, cable shall be positioned so that it neither lies on nor rubs against the equipment tank or enclosure.

K. The minimum bending radius of primary cable is 12 times the overall diameter of the cable. The minimum bending radius of secondary cable is 6 times the overall diameter of the cable. In all cases, the minimum bending radius specified is measured to the surface of the cable on the inside bend. No cable bends shall be made within 6 inches of a cable termination base.

L. Temporary caps shall be immediately installed on all cut cable ends.

M. City of Boerne shall arrange for all primary cable testing prior to acceptance per the testing criteria included in these specifications.

3.6 PRIMARY CABLE TERMINATIONS

A. The City of Boerne shall install prefabricated stress cones or terminations in accordance with manufacturer's instructions at all primary cable terminals. The outer conductive surface of the termination shall be bonded to the system neutral. A cold-shrink sleeve shall be installed to seal between the body of the termination and the cable jacket.

B. Mating surfaces shall be wiped with a solvent such as denatured alcohol to remove any accumulation of dirt, moisture or other conducting materials. A silicone grease or similar lubricant shall be applied afterwards in accordance with the manufacturer's recommendations. Whenever prefabricated cable devices are opened, the un-energized mating surfaces shall be lubricated with silicone grease before the fittings are reconnected.

3.7 SECONDARY CABLE CONNECTIONS

A. The City of Boerne will make all secondary cable connections in transformers.

B. A suitable inhibiting compound shall be used with all secondary and service connections.

C. All secondary cable connections located below grade or in secondary enclosures shall be made with pre-insulated secondary connectors. Diving bells with open terminals, insulating boots or moisture barriers that depend solely on tape are not acceptable.

D. All transformer secondary phase terminal connections shall be completely insulated. If the secondary phase terminals are threaded studs, the connection shall be made with a pre-insulated secondary transformer connection block. If the transformer secondary phase terminals are insulated cable leads, connection shall be made with a pre-insulated secondary connector block or with a secondary prefabricated splice when the transformer leads continue directly to the service.

E. If a transformer is so large that it must have secondary spades, the spades shall be taped or otherwise insulated. Boots used for insulation shall be taped so that they cannot be readily slipped off.

3.8 TRANSFORMER INSTALLATIONS

A. Transformers shall be supplied and set on transformer pads by the City of Boerne. The City of Boerne is responsible for making up all connections primary and secondary. Only qualified and experienced personnel shall be allowed to make connections and cable terminations.

B. The Contractor shall install one ground rod at each single phase transformer location as shown in the transformer pad detail drawings. Install a ground on the primary side and a second ground rod on the secondary side of three phase transformers.

C. The City of Boerne shall install all transformers and connectors.

D. The City of Boerne shall make all primary, secondary and ground connections at the transformers and enclosures. Only qualified and experienced personnel shall be allowed to make connections.

3.9 LOAD BREAK JUNCTION BOXES

A. The City of Boerne shall be responsible for installing and bolting load break junction boxes on the pads as specified.

B. The Contractor shall install one ground rod at each load break junction box.

C. The City of Boerne shall make all primary and ground connections at the load break junction boxes. Only qualified and experienced personnel shall be allowed to make connections.

3.10 METER PEDESTALS AND SECONDARY ENCLOSURES

A. The City of Boerne shall be responsible for installing all meter pedestals as specified.

B. Excavations for meter pedestals and enclosures shall be made so as to disturb the surrounding earth as little as practical. Where a transformer and meter pedestal are placed together the access door to the pedestal shall be installed facing away from the transformer. Soil in the immediate vicinity shall be tamped and sloped away from the meter pedestal pad. The excess soil shall be spread evenly over the surface of the ground.

C. The Contractor shall install one ground rod at specified meter pedestal locations.

D. The City of Boerne shall make all secondary and ground connections at the meter pedestals. Only qualified and experienced personnel shall be allowed to make connections.

3.11 WARNING SIGNS

A. Each equipment enclosure shall display a "Caution" sign placed so that it is visible to anyone attempting entry to the enclosure. Also, the equipment inside the enclosure shall display a "Danger" sign so that it is visible when the enclosure is open. A "TWO-WAY FEED" sign shall be placed on the inside and outside of enclosure with two different feeds.

3.12 STREET LIGHT INSTALLATIONS

A. In the City of Boerne Electric Service Area only:
   1. Street Lights shall be supplied and installed by the City of Boerne. The City of Boerne is responsible for the foundation and erection of the street light poles.
   2. The City of Boerne is responsible for placing and connecting luminaires to the poles.
   3. The City of Boerne is responsible for making up all connections. Only qualified and experienced personnel shall be allowed to make connections.
   4. The City of Boerne shall install photo electric cell and test operate the light to assure proper operation.
   5. The City of Boerne shall orient lights as specified by the City of Boerne.

B. In other Electric Utility Service Areas:
   1. Coordinate with Electric Utility for installation of street lights.
   2. Public streets dedicated to the City of Boerne:
      a. Include the City of Boerne in coordination with the Electric Utility.

b. Arrange for service to be transferred to the City of Boerne upon acceptance of subdivision.

3. Private streets: Arrange for service to be transferred to entity responsible for street maintenance.

C. The Contractor shall trench a 24 IN deep (to final grade) and install a 1 IN conduit to feed the street lights. Trench backfill requirements for street light conduits are identical to primary and secondary electric and telecommunication conduit trench backfill requirements.

3.13 RISER POLE INSTALLATION

A. The City of Boerne will install the riser pole(s).

B. The City of Boerne shall install the riser conduits, pole brackets, conduit bushings, couplings, and tie the lower pole bracket to the pole ground. The City of Boerne shall also pull in the primary cable in the riser conduits.

C. On all risers, the City of Boerne shall provide a minimum of 24 IN or more extra primary cable than the specified distance between the riser and the overhead primary neutral.

3.14 GROUNDING

A. The Contractor shall install ground rods at all equipment locations as specified.

B. The City of Boerne shall make all ground connections to ground rods and equipment enclosures. All equipment enclosures shall have two separate connections between the enclosure and the ground rod.

3.15 INSPECTIONS

A. The City of Boerne will inspect all phases of work as it progresses.

B. The Contractor shall be responsible for notifying City of Boerne at least 24 hours in advance of any requests for inspection. All inspections will take place during normal business hours.

3.16 FIELD QUALITY CONTROL

A. The Contractor shall be responsible for notifying City of Boerne at least 24 hours in advance of testing so that a City of Boerne representative may witness all testing. All testing will take place during normal business hours.

B. Test trench backfill in accordance with Section 02221.

C. Test base and subgrade beneath equipment pads in accordance with Section 02200.

D. Conduit:

1. Mandrel Test – Pull approved mandrel through each conduit to show that conduit is clean and ready for cable. Measure pulling force as mandrel is pulled through conduit. Pulling force shall not exceed 250 LB.
2. Repair conduits for which more than 250 LB. of pulling force is required to pull mandrel through conduit.

E. Cable testing

1. Unless otherwise specified, all electrical cables shall be tested in accordance to manufacturer's recommendations.
2. The following are recommended tests:
   a. Continuity - After installation of the cable and prior to the high potential test, the City of Boerne will perform a simple continuity test on the system. This can easily be accomplished by grounding the conductor at the source and checking for continuity from the end of each tap with an ohmmeter or with a battery and ammeter.
   b. High Potential - After successful continuity tests, the City of Boerne shall perform high potential tests on EACH length of cable, with terminations in place but disconnected from the system.

1) The installation shall withstand for a minimum of 15 minutes a DC test potential of 80 kV for 25 kV cable with 260 mils of insulation, type XLPE. The voltage may either be increased continuously or in steps to the maximum test value.
2) If increased continuously, the rate of increase of the test voltage should be approximately uniform and increasing to maximum voltage in not less than 10 seconds and in not more than approximately 60 seconds.
3) If applied in steps , the rate of increase of test voltage from one step to the next should be approximately uniform. The duration at each step shall be long enough for the absorption current to attain reasonable stabilization, one (1) minute minimum. Current and voltage readings should be taken at the end of each step duration. The number of steps should be from five (5) to eight (8).

F. WARNING - A hazardous voltage may still exist on the cable after the above testing has been completed. Therefore, before handling the cable, the conductor shall be grounded to permit any charge to drain to earth.

END OF SECTION

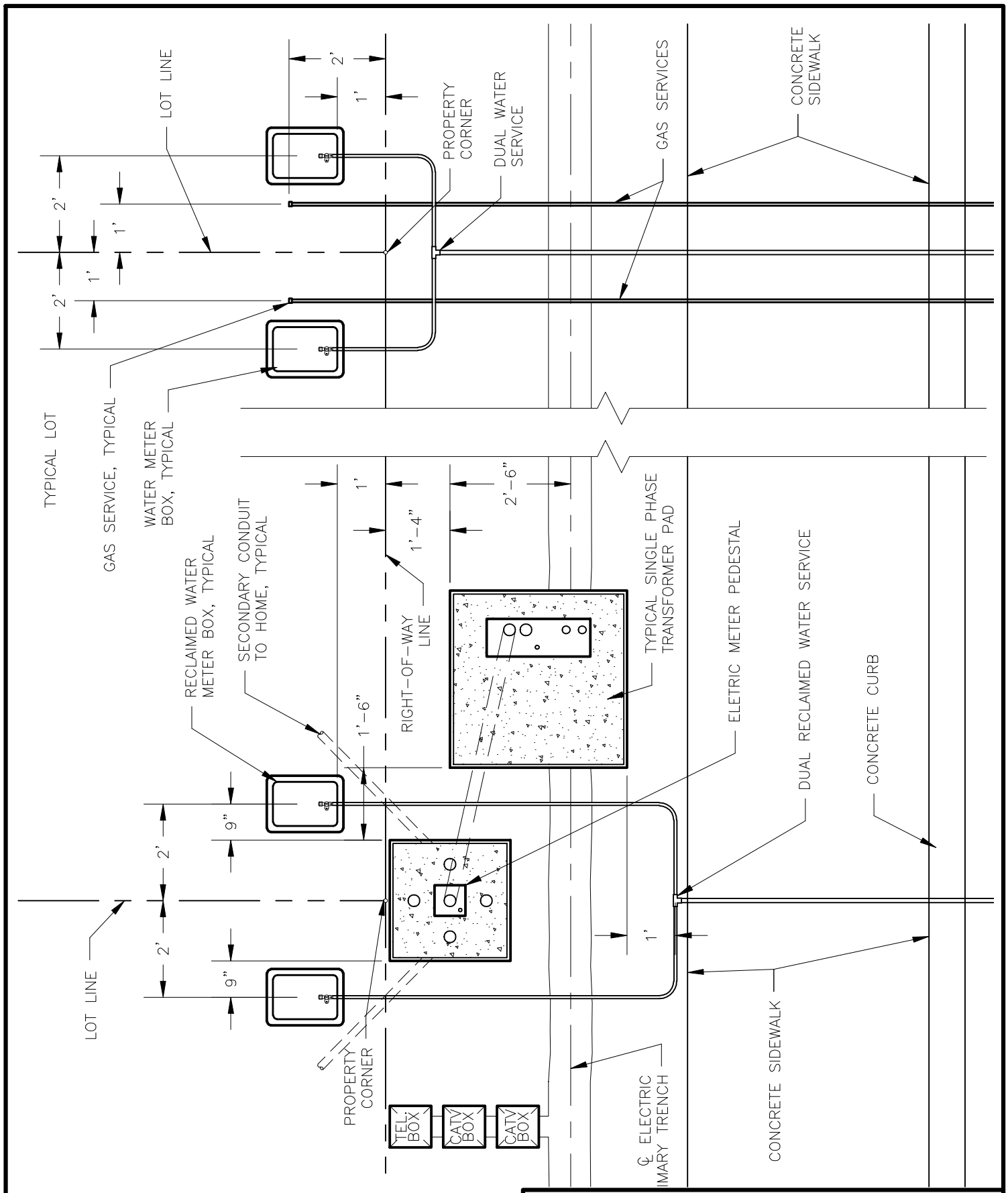

CITY OF BOERNE

TYPICAL UTILITY SERVICE LAYOUT

ELECTRIC IN ROW & SIDEWALK AT CURB

SCALE:	DRAWING No.	DATE:
N.T.S.	00000-1.0	JULY 2015

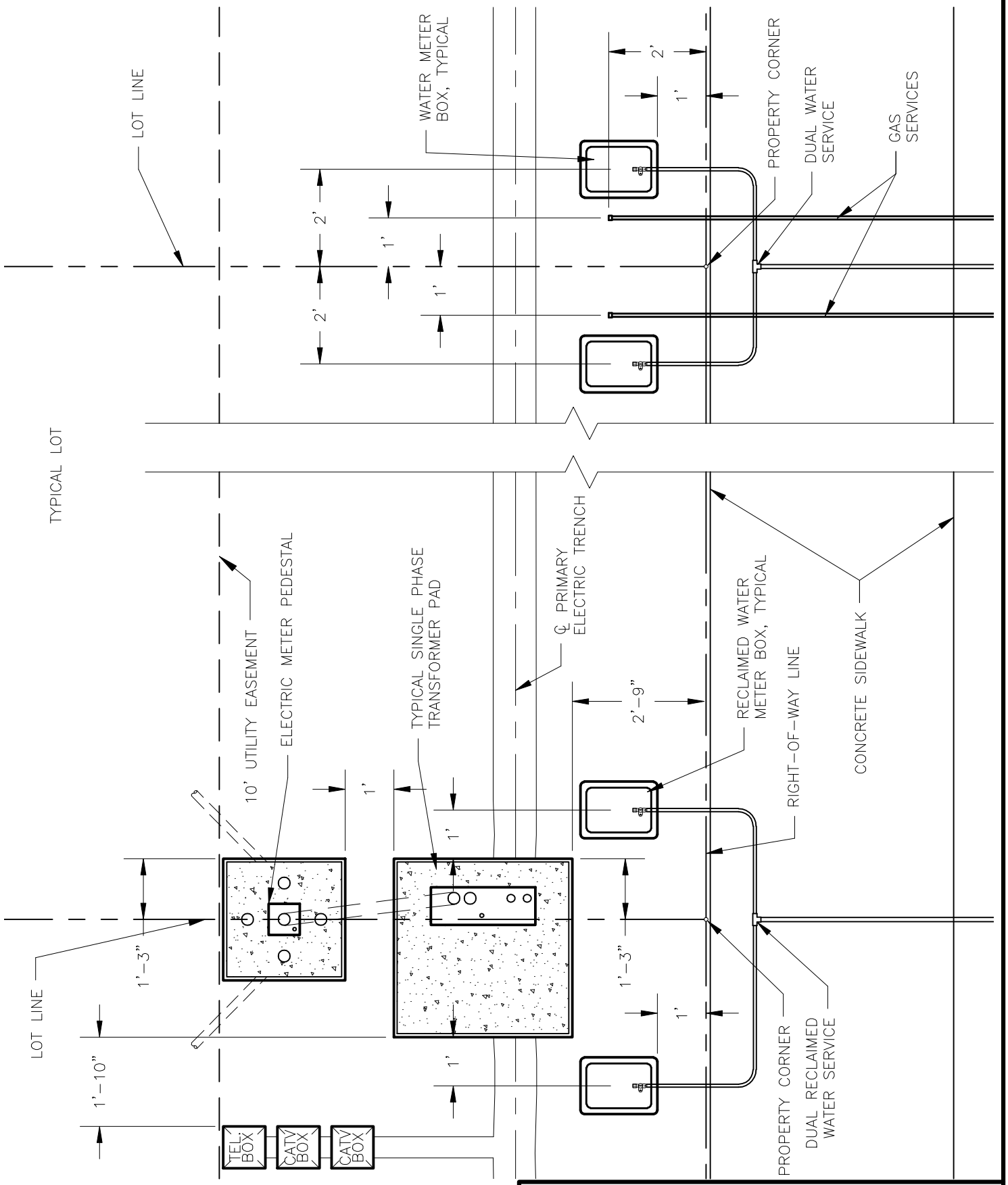

CITY OF BOERNE

TYPICAL UTILITY SERVICE LAYOUT

ELECTRIC IN EASEMENT & SIDEWALK AT ROW LINE

SCALE:	DRAWING No.	DATE:
N.T.S.	00000-1.1	JULY 2015

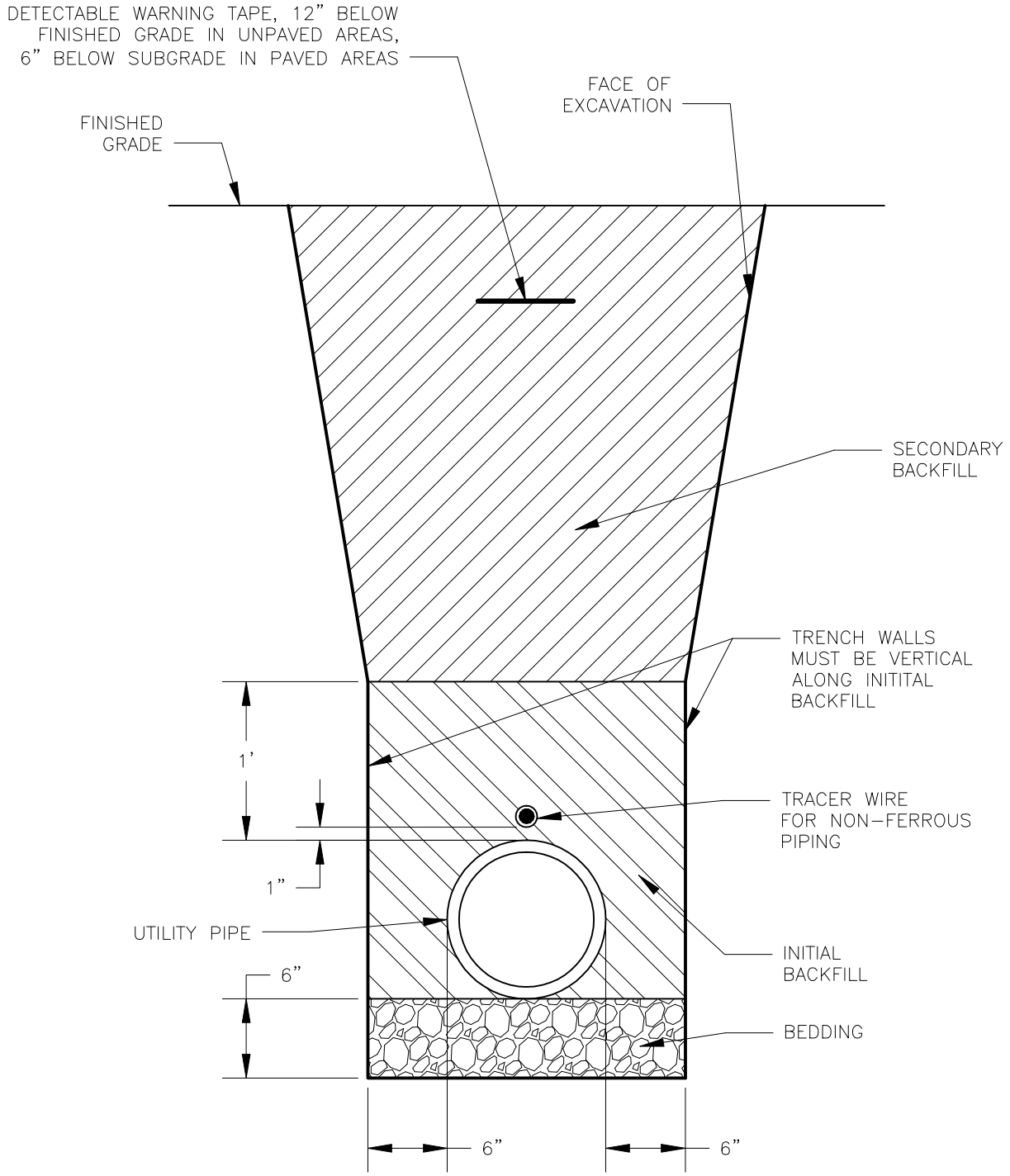

CITY OF BOERNE

UTILITY PIPE TRENCH

SCALE:	DRAWING No.	DATE:
N.T.S.	02221-1.0	JULY 2015

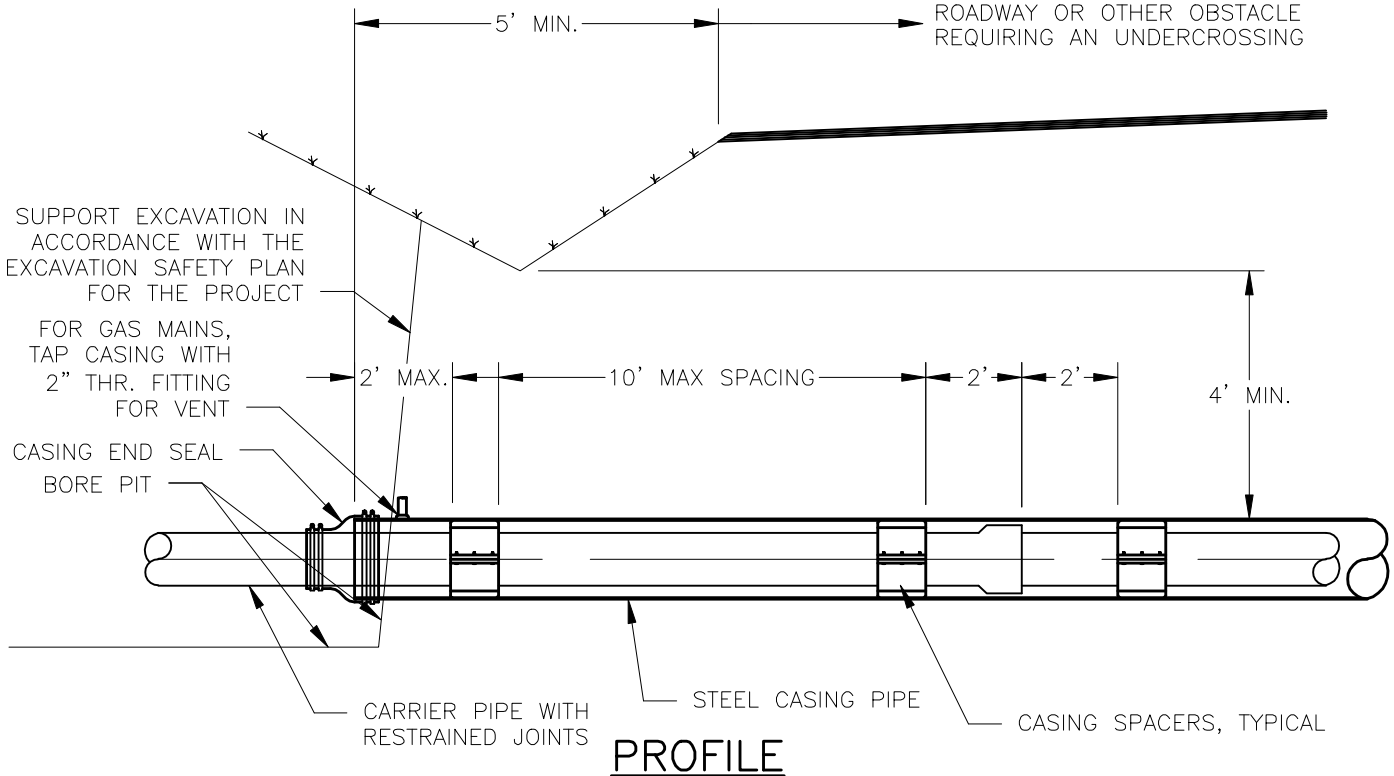

PROFILE

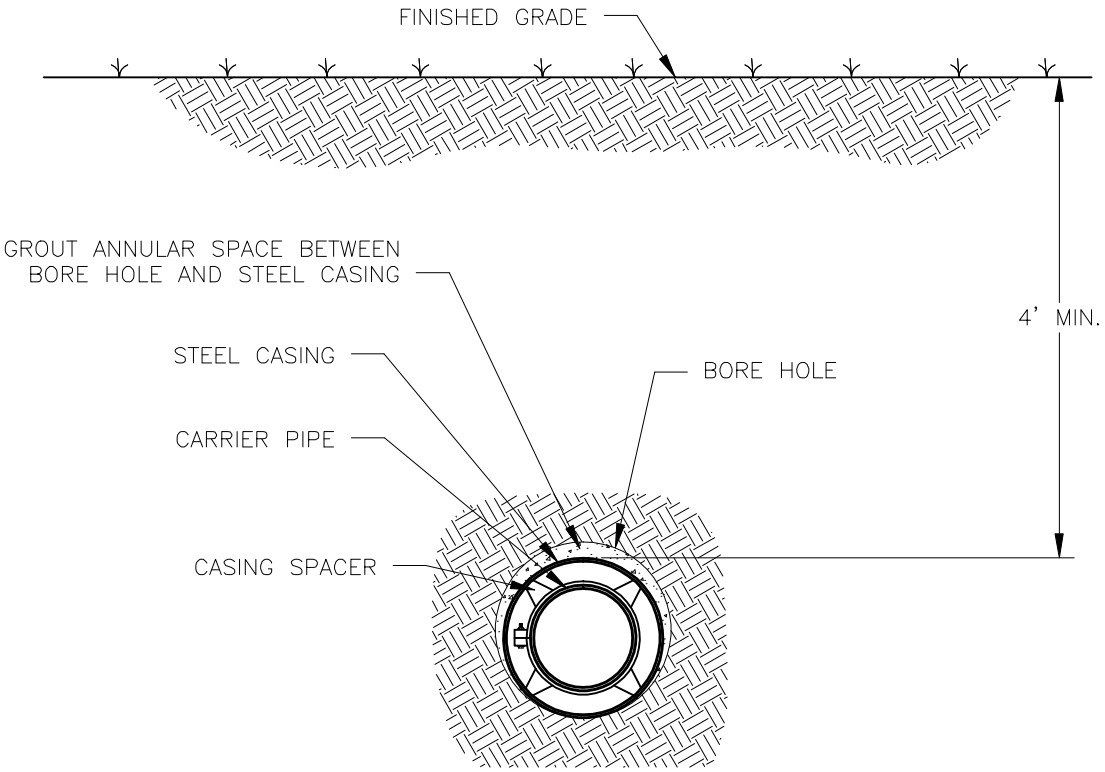

SECTION

CITY OF BOERNE

CASED BORE
PIPELINE UNDERCROSSING

SCALE:	DRAWING No.	DATE:
N.T.S.	02224-1.0	JULY 2015

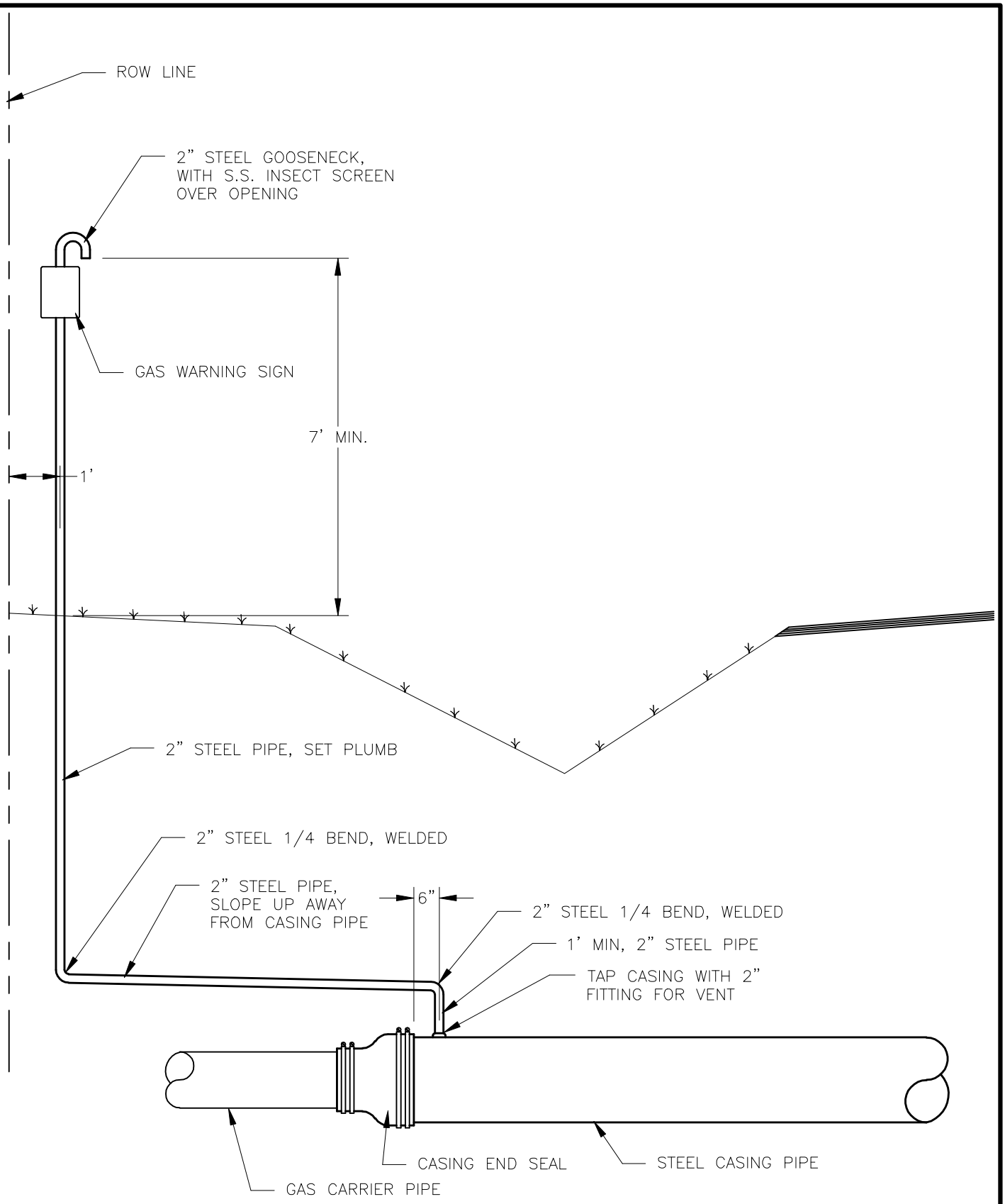

PROFILE

CITY OF BOERNE

CASING VENT FOR
GAS MAIN UNDERCROSSING

SCALE:	DRAWING No.	DATE:
N.T.S.	02224-1.1	JULY 2015

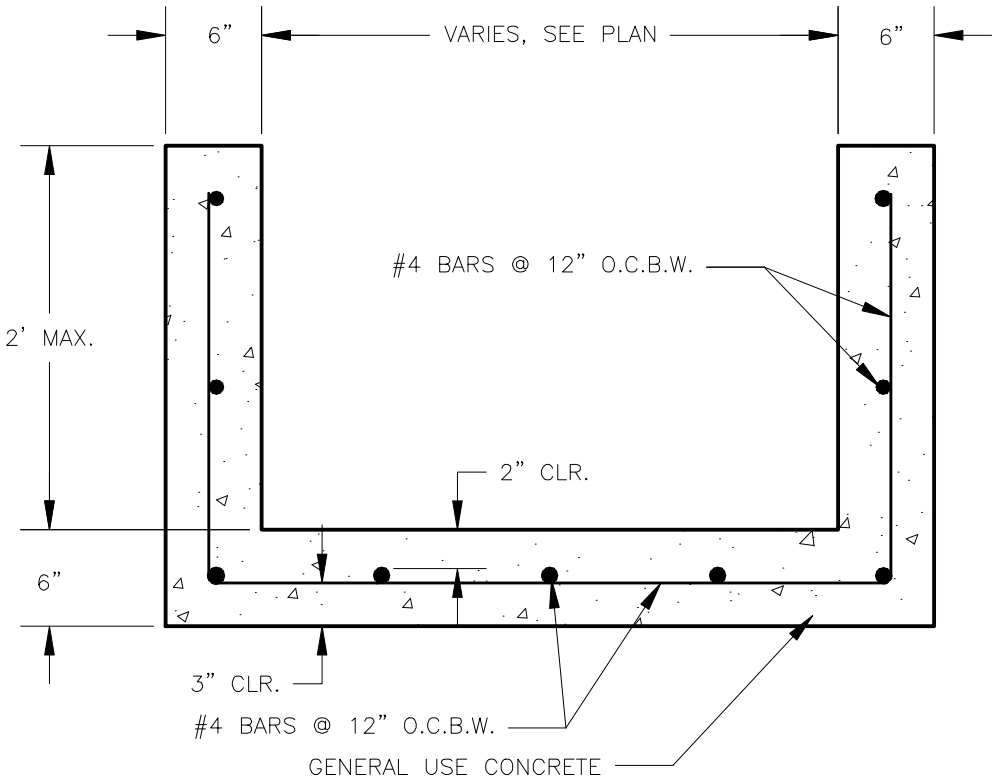

CITY OF BOERNE		
CONCRETE FLUME		
SCALE: N.T.S.	DRAWING No. 02423-1.0	DATE: JULY 2015

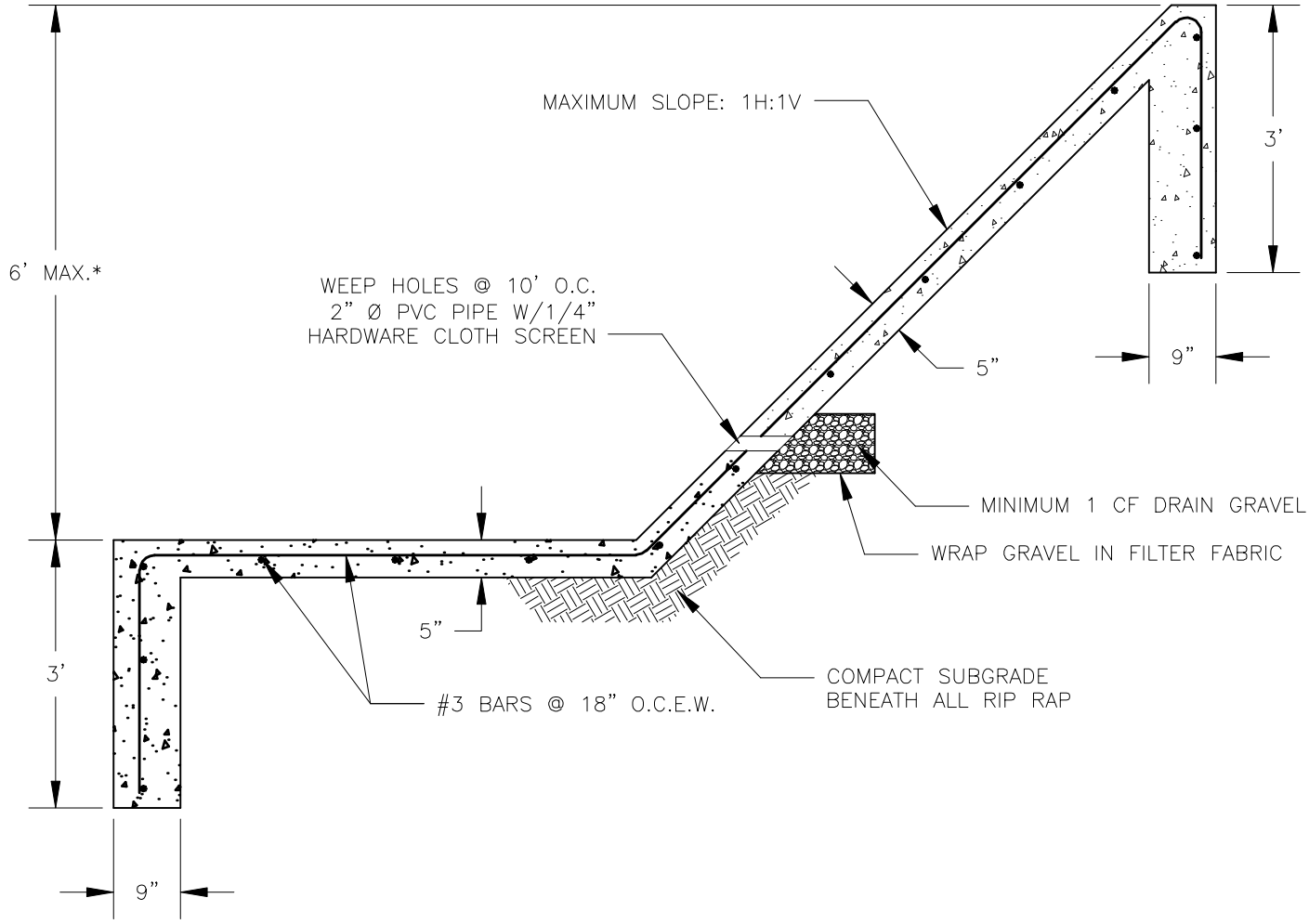

*MAXIMUM HEIGHT MAY BE EXCEEDED IF DESIGN MODIFIED BASED UPON GEOTECHNICAL SLOPE STABILITY ANALYSIS AND APPROPRIATE STRUCTURAL DESIGN.

CITY OF BOERNE

CONCRETE RIP RAP
TYPICAL SECTION

SCALE:	DRAWING No.	DATE:
N.T.S.	02423-1.1	JULY 2015

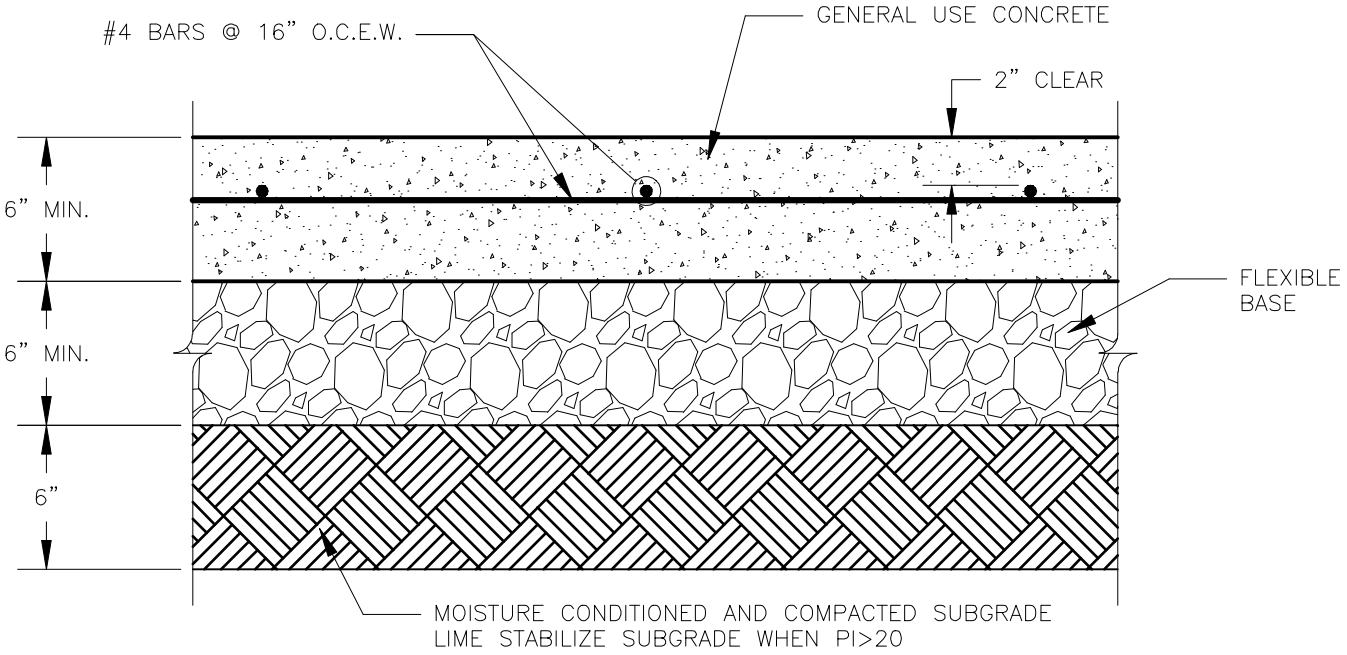

NOTE: USE PROJECT PAVEMENT SECTION DESIGN WITH 6" MINIMUM CONCRETE THICKNESS AND 6" MINIMUM BASE THICKNESS AS SHOWN. INCREASE REINFORCING PER ENGINEER'S PLANS FOR CONCRETE PAVEMENT THICKNESS GREATER THAN 6".

CITY OF BOERNE		
CONCRETE PAVEMENT SECTION		
SCALE: N.T.S.	DRAWING No. 02502-1.0	DATE: JULY 2015

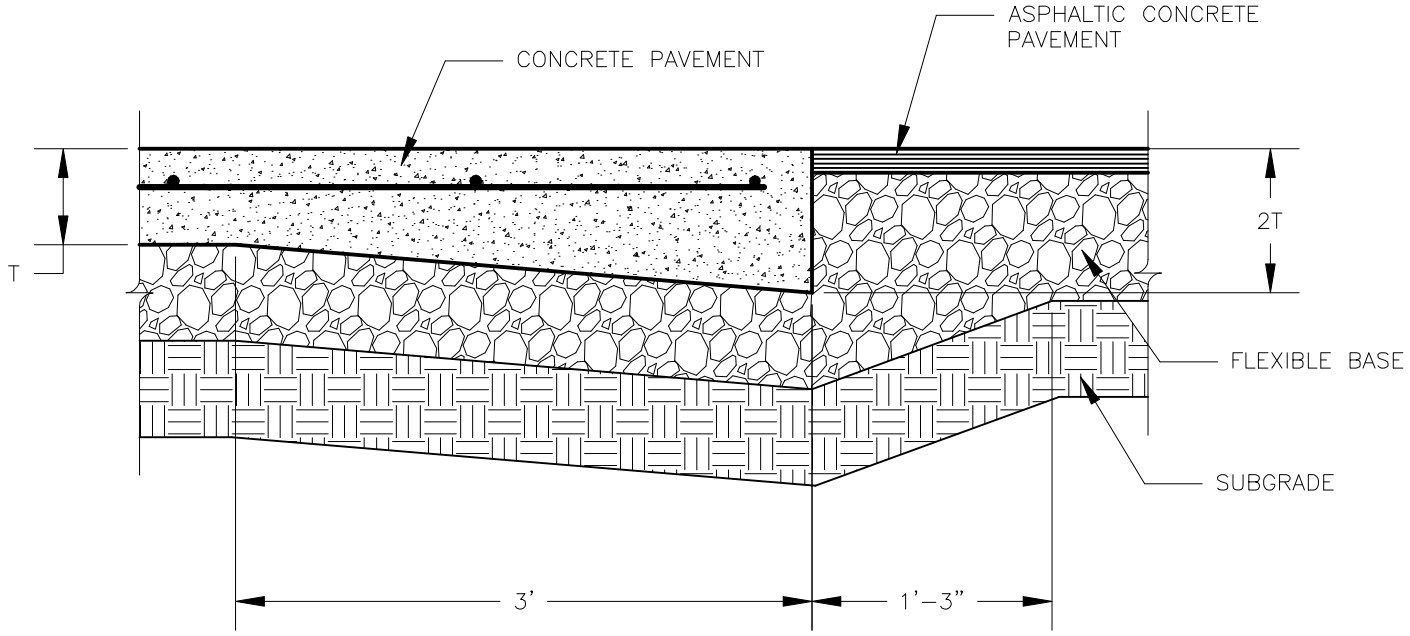

T = DESIGN THICKNESS OF CONCRETE PAVEMENT

CITY OF BOERNE

ASPHALT TO CONCRETE PAVEMENT JOINT

SCALE:	DRAWING No.	DATE:
N.T.S.	02502-1.1	JULY 2015

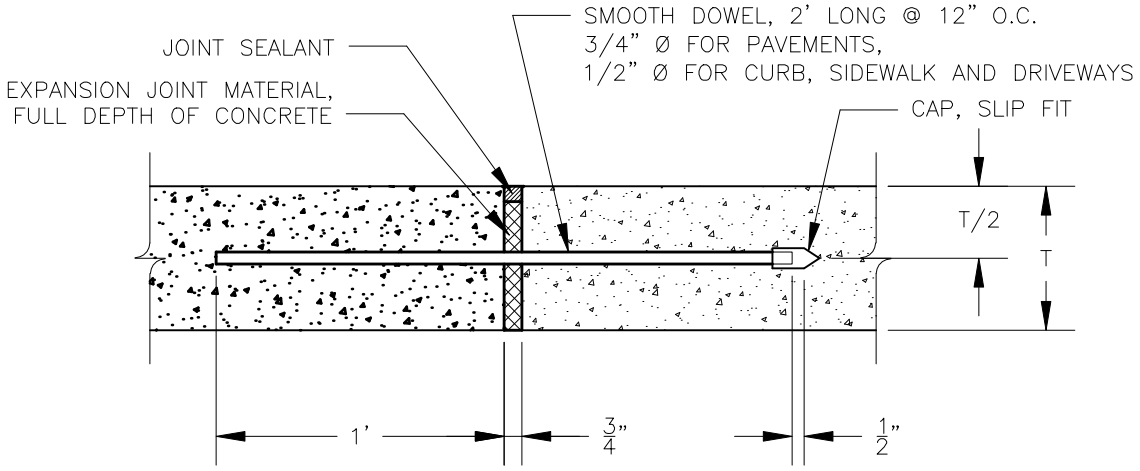

EXPANSION JOINT

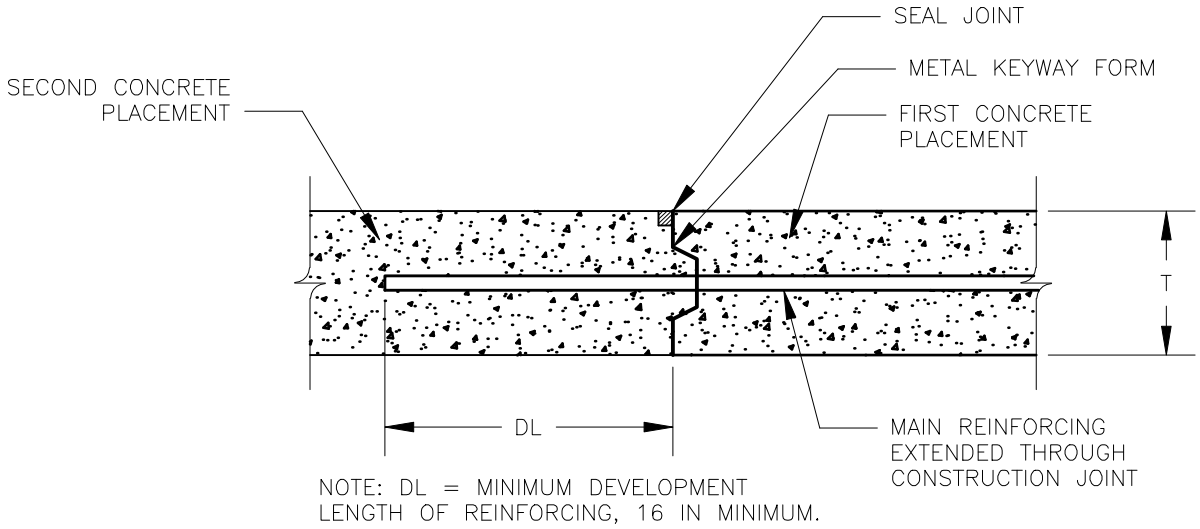

NOTE: DL = MINIMUM DEVELOPMENT LENGTH OF REINFORCING, 16 IN MINIMUM.

CONSTRUCTION JOINT

NOTE: USE KEYED JOINTS WITH METAL KEYWAY FORM FOR CONSTRUCTION JOINTS. FOR SIDEWALKS, DRIVEWAYS AND CURBS ONLY: AS AN ALTERNATE TO THE METAL KEYWAY FORM, ROUGHEN CONCRETE OF ADJOINING FIRST POUR AND APPLY AN ADHESIVE BONDING AGENT TO ROUGHENED CONCRETE.

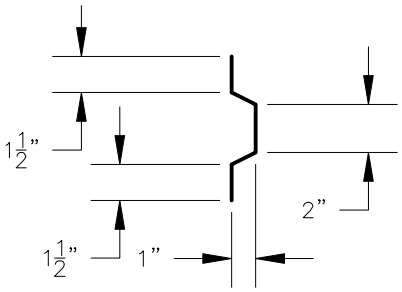

NOTE: DIMENSIONS ARE NOMINAL, ±1/8".

METAL KEYWAY FORM SECTION

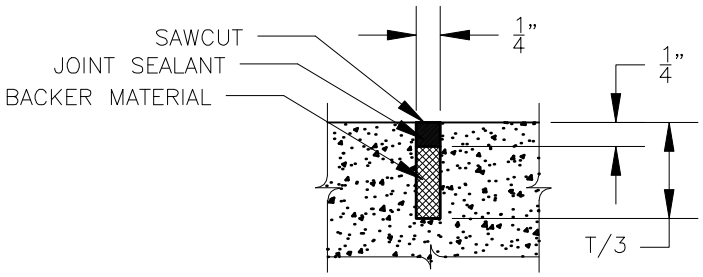

SAWED CONTRACTION JOINT

NOTE: SAWED CONTRACTION JOINTS MUST BE USED ON CONCRETE PAVING. ON DRIVEWAYS, SIDEWALKS AND CURB, TOOLED CONTRACTION JOINTS MAY BE USED. THE TOOLED JOINT MUST BE 1/2 INCH DEEP AND 1/2 INCH WIDE WITH A 1/4 INCH RADIUS ALONG THE EDGE.

CITY OF BOERNE

CONCRETE JOINTS

SCALE:	DRAWING No.	DATE:
N.T.S.	02502-1.2	JULY 2015

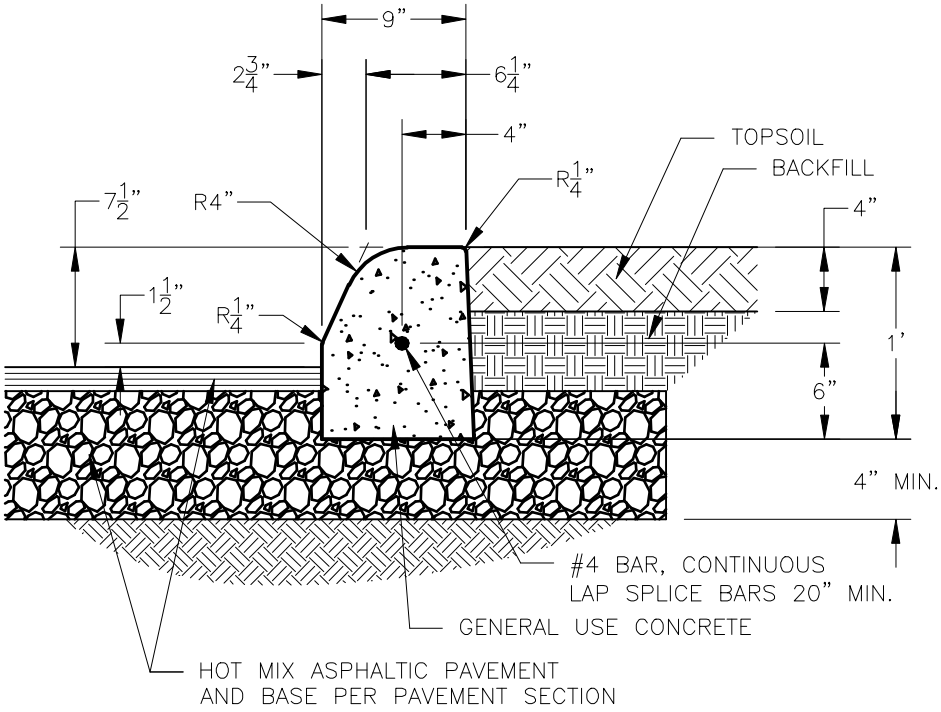

STANDARD CONCRETE CURB

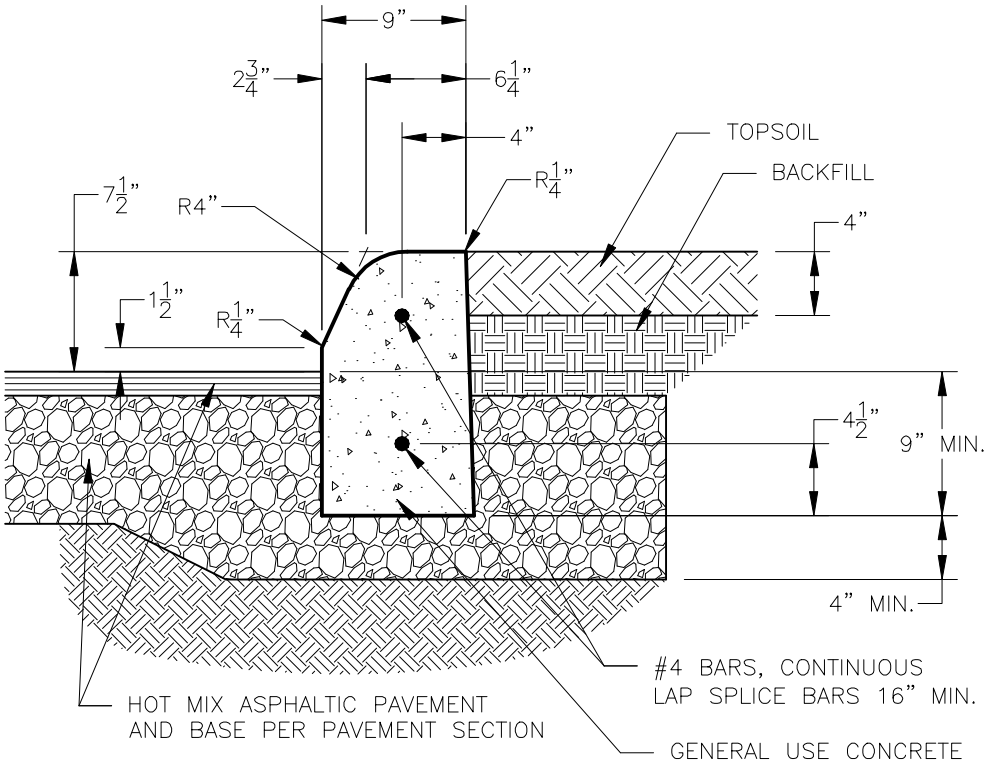

ALTERNATE DEEP CONCRETE CURB

NOTE:
STANDARD CURB MUST BE REMOVED AND REPLACED WITH A HEADER CURB TO ACCOMMODATE DRIVEWAYS.

THE ALTERNATE DEEP CURB MAY BE SAW CUT HORIZONTALLY TO ACHIEVE A HEADER CURB SECTION FOR DRIVEWAYS.

CITY OF BOERNE		
CONCRETE CURB		
SCALE: N.T.S.	DRAWING No. 02502-2.0	DATE: JULY 2015

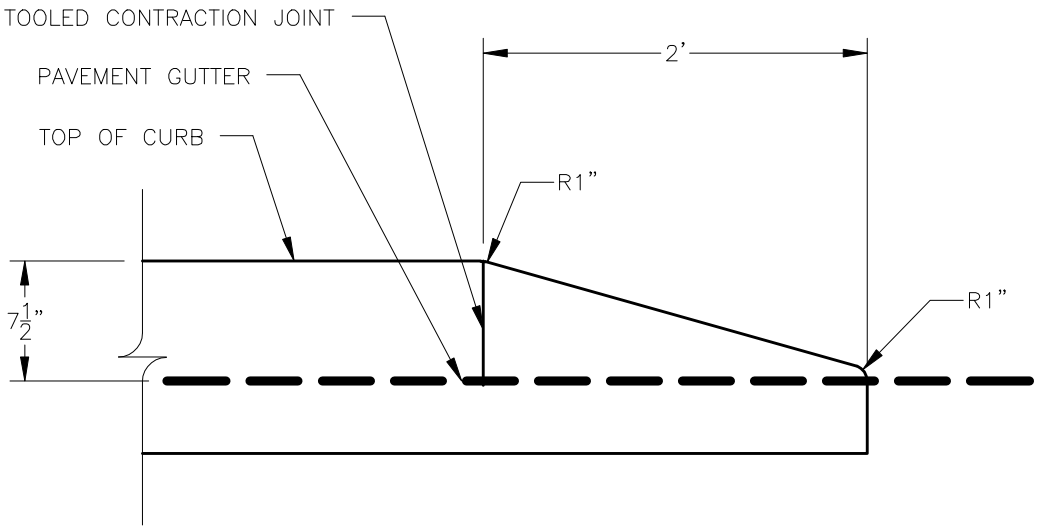

CURB TERMINATION ELEVATION

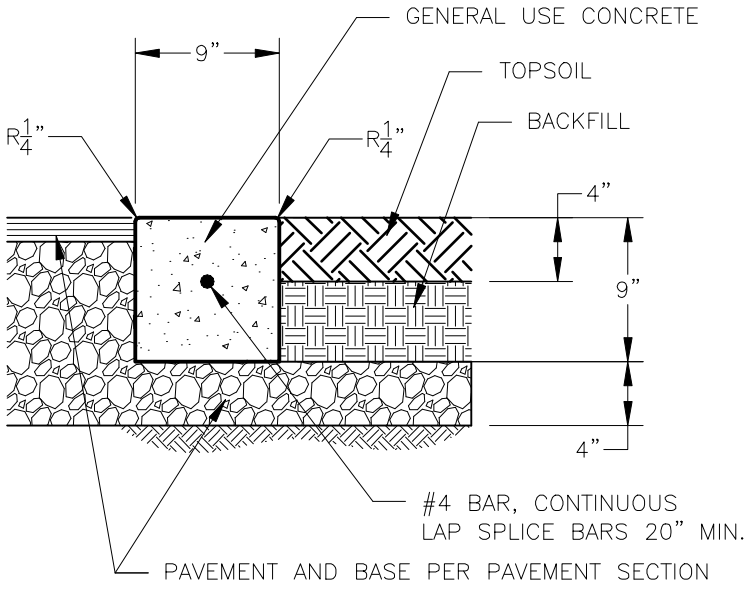

HEADER CURB SECTION

CITY OF BOERNE		
CONCRETE CURB TERMINATION AND HEADER CURB		
SCALE: N.T.S.	DRAWING No. 02502-2.1	DATE: JULY 2015

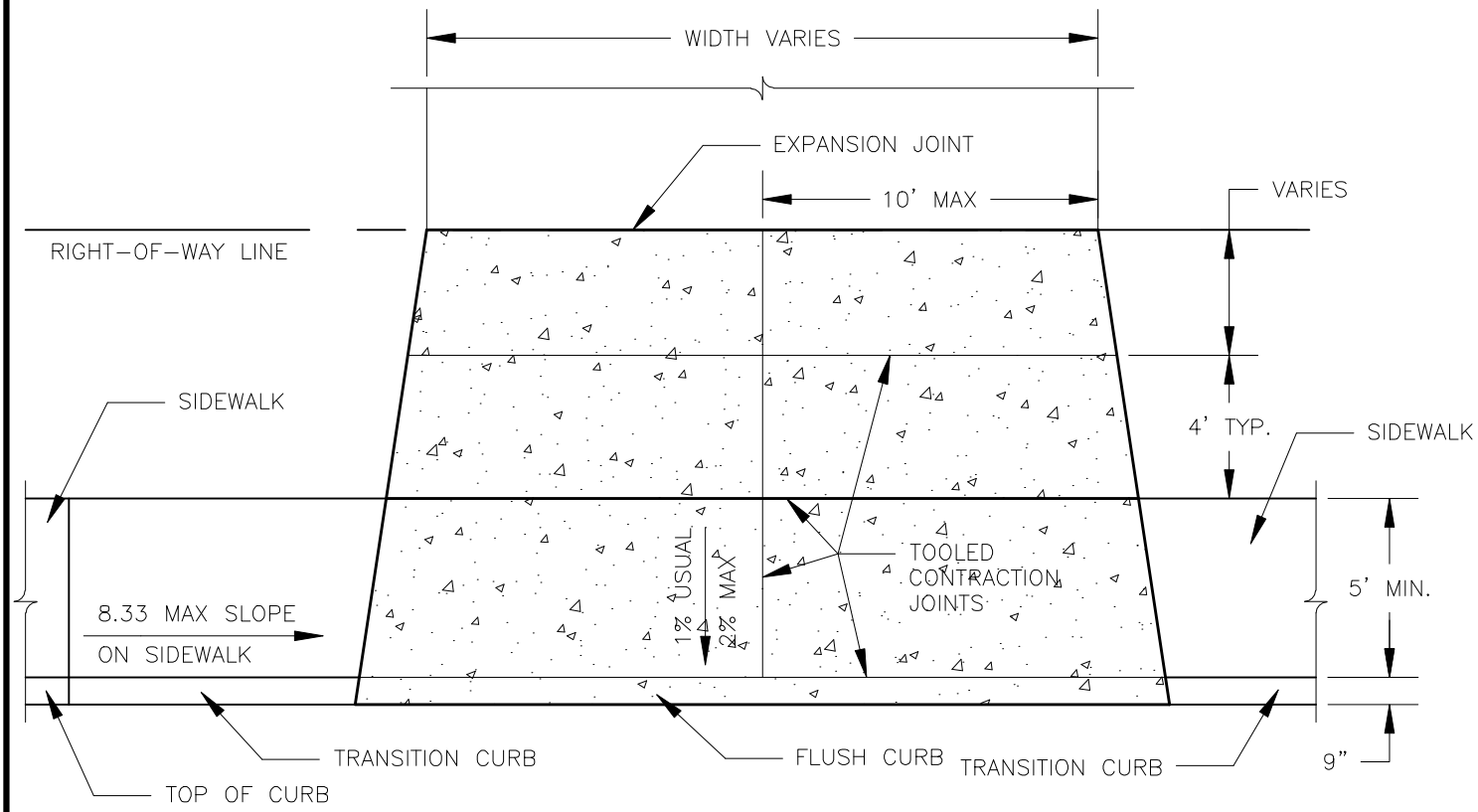

PLAN

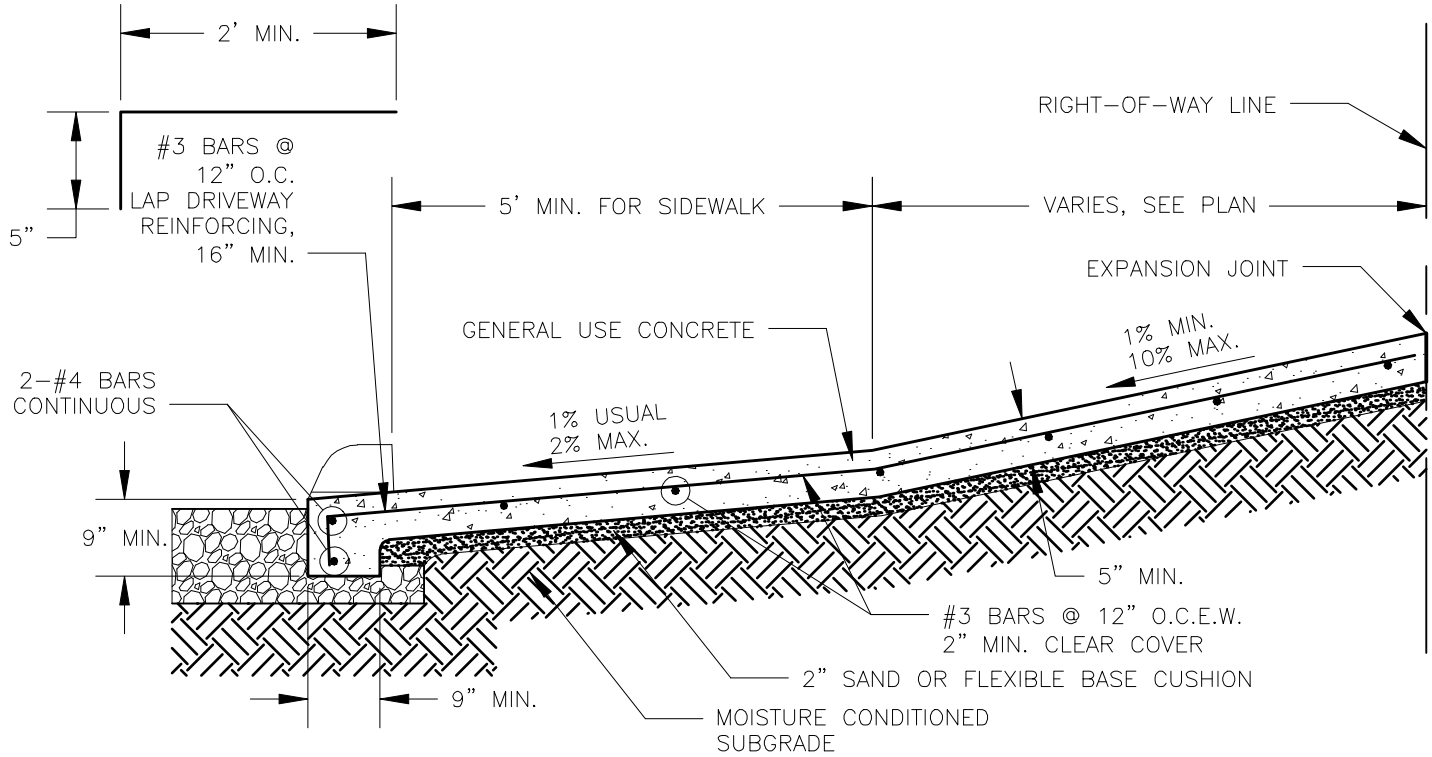

SECTION

NOTE: THE HEADER CURB CONSTRUCTION MAY BE DELETED WHEN CONSTRUCTING DRIVEWAY ADJACENT TO AN EXISTING HEADER CURB THAT IS A MINIMUM OF 9" DEEP WITH AT LEAST ONE HORIZONTAL BAR. INSTALL AN EXPANSION JOINT BETWEEN THE EXISTING HEADER CURB AND DRIVEWAY.

CITY OF BOERNE

CONCRETE DRIVEWAY APPROACH
SIDEWALK AT CURB

SCALE:	DRAWING No.	DATE:
N.T.S.	02502-3.0	JULY 2015

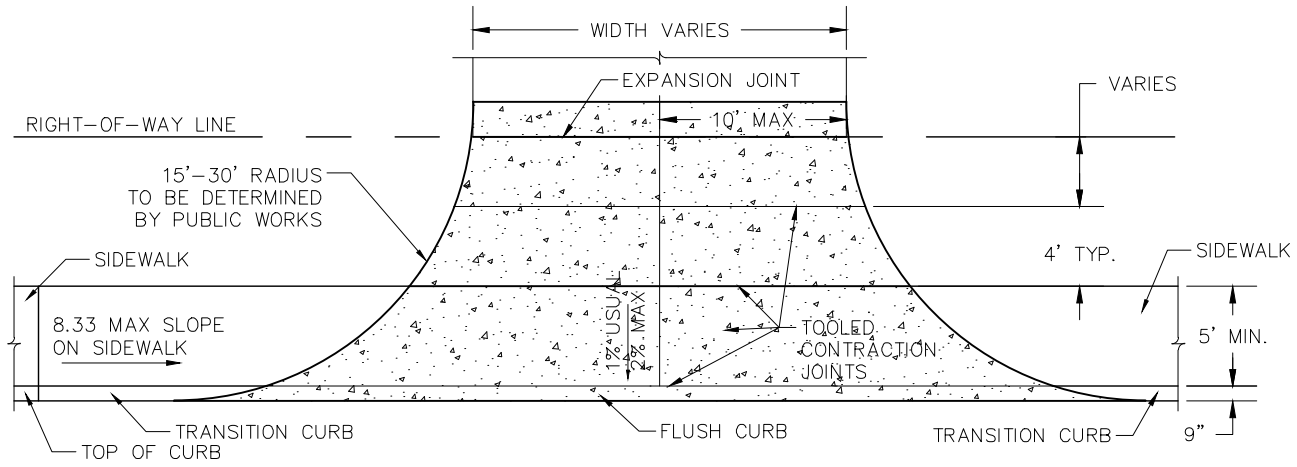

PLAN

* IF CURB IS CONSTRUCTED BEFORE DRIVEWAY, DOWEL AND EPOXY INTO CURB WITH #4 BARS X 18" @ 18" O.C.

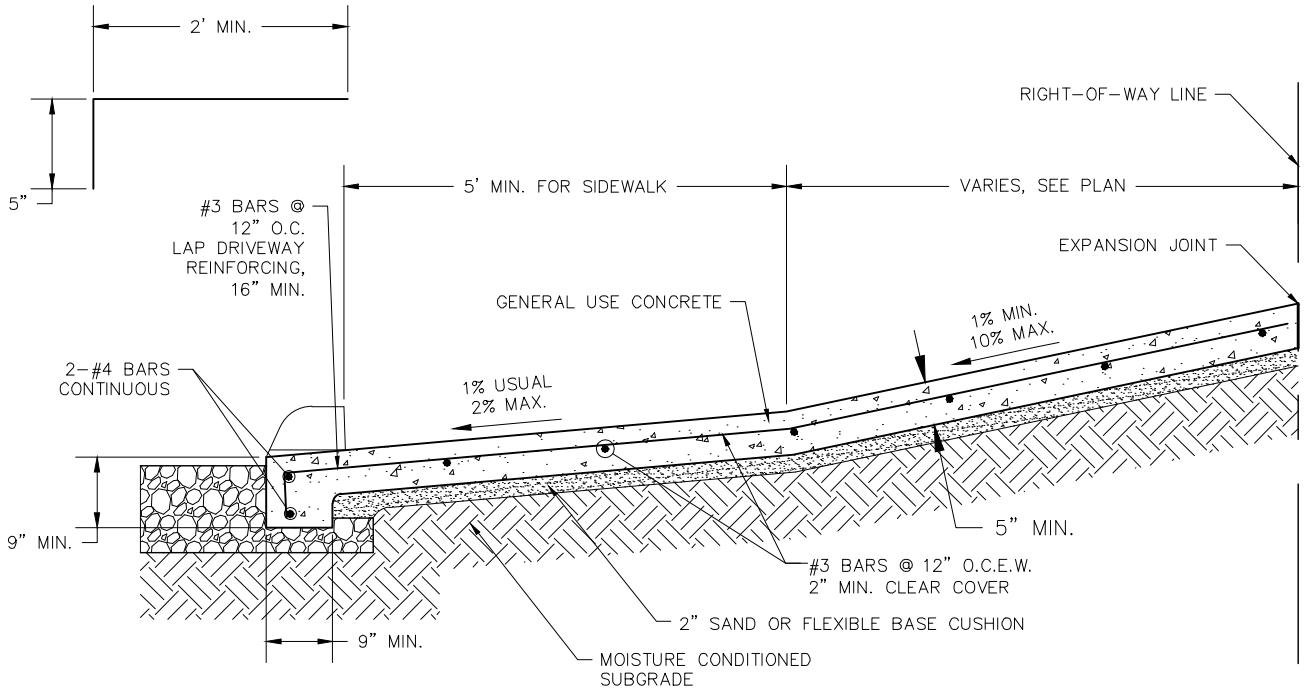

SECTION

NOTE: THE HEADER CURB CONSTRUCTION MAY BE DELETED WHEN CONSTRUCTING DRIVEWAY ADJACENT TO AN EXISTING HEADER CURB THAT IS A MINIMUM OF 9" DEEP WITH AT LEAST ONE HORIZONTAL BAR. INSTALL AN EXPANSION JOINT BETWEEN THE EXISTING HEADER CURB AND DRIVEWAY.

CITY OF BOERNE

NON-RESIDENTIAL
CONCRETE DRIVEWAY APPROACH
SIDEWALK AT CURB

SCALE:	DRAWING No.	DATE:
N.T.S.	02502-3.0A	FEB 2018

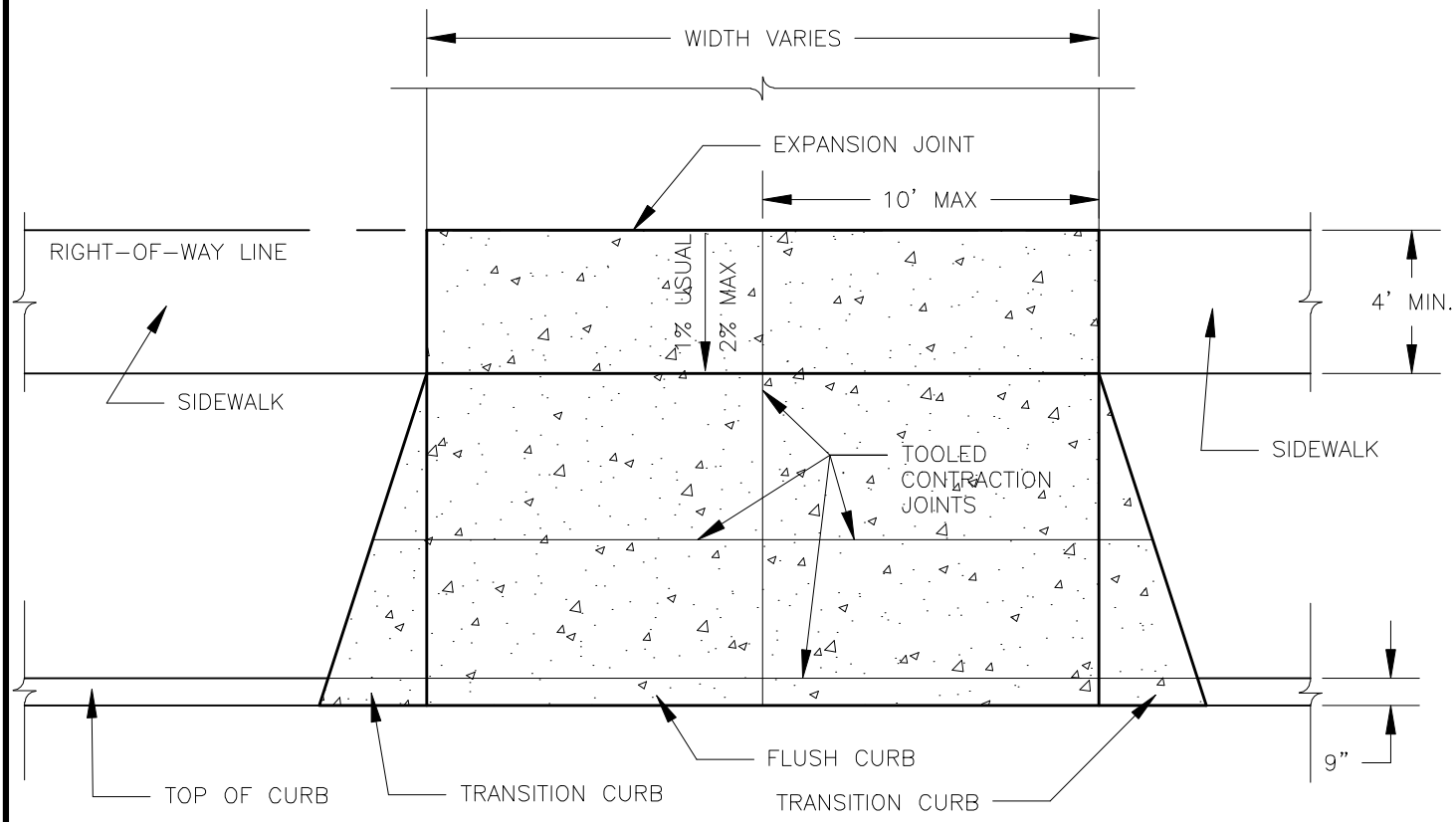

PLAN

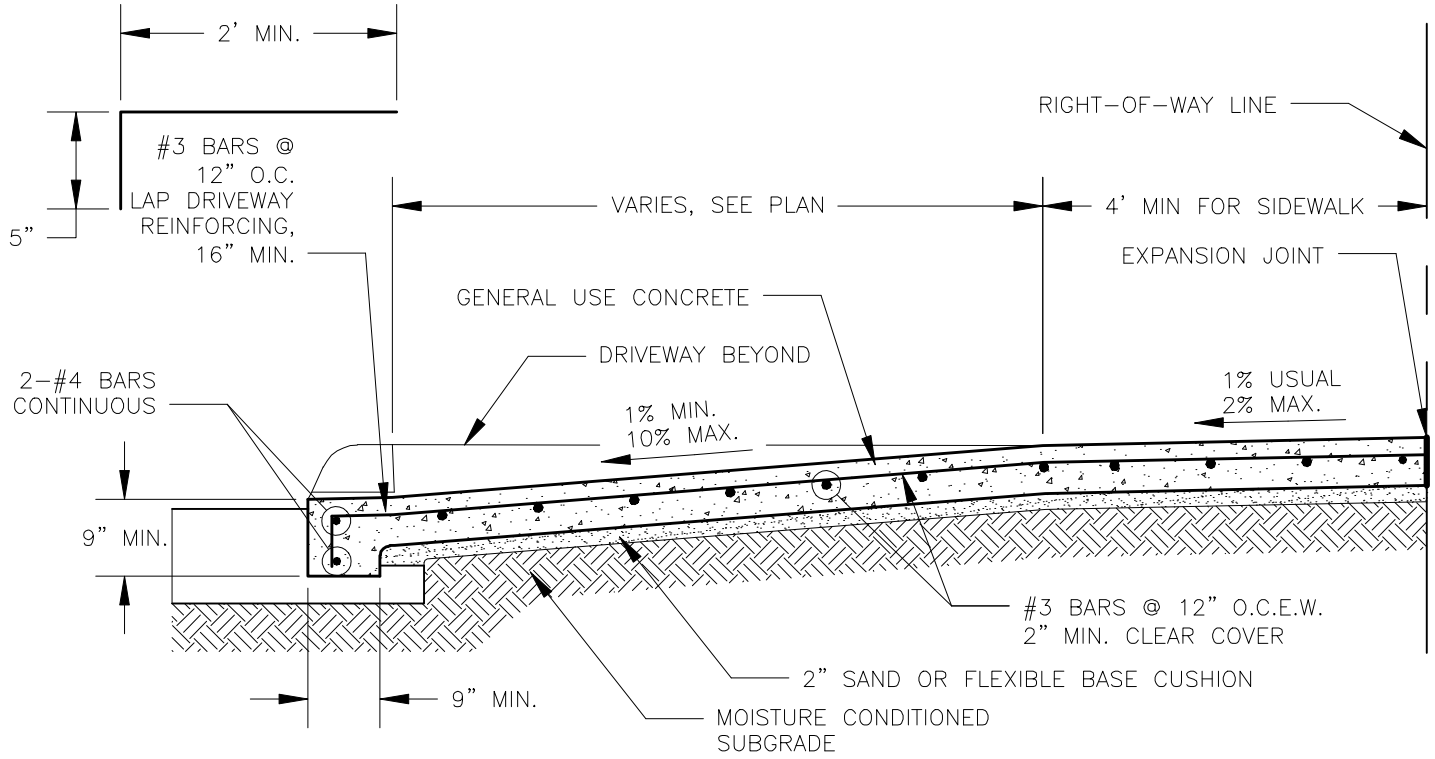

SECTION

NOTE: THE HEADER CURB CONSTRUCTION MAY BE DELETED WHEN CONSTRUCTING DRIVEWAY ADJACENT TO AN EXISTING HEADER CURB THAT IS A MINIMUM OF 9" DEEP WITH AT LEAST ONE HORIZONTAL BAR. INSTALL AN EXPANSION JOINT BETWEEN THE EXISTING HEADER CURB AND DRIVEWAY.

CITY OF BOERNE

CONCRETE DRIVEWAY APPROACH
SIDEWALK AT ROW LINE

SCALE:	DRAWING No.	DATE:
N.T.S.	02502-3.1	JULY 2015

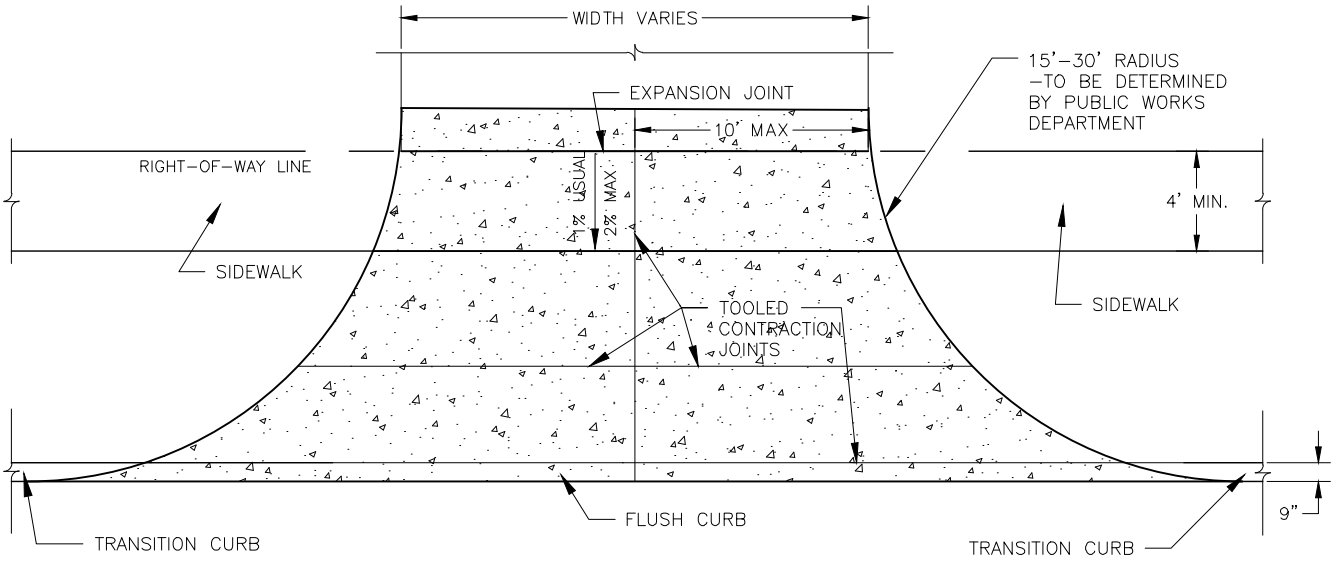

PLAN

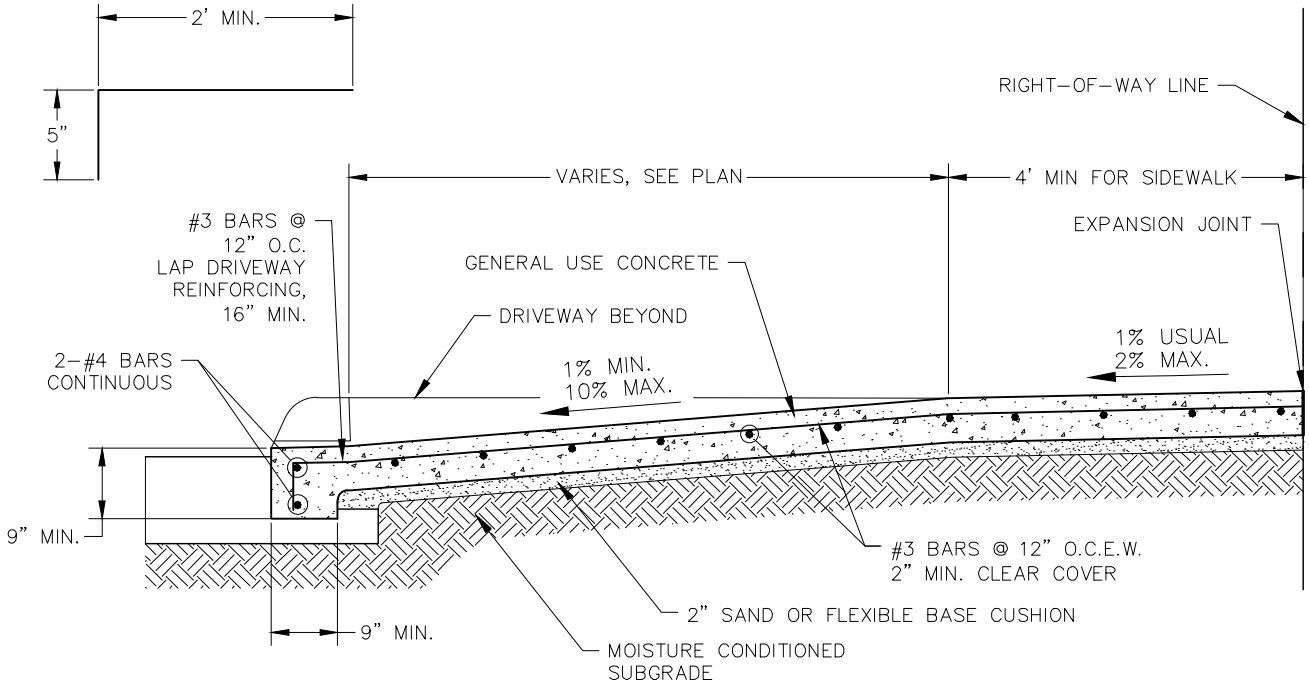

SECTION

NOTE: THE HEADER CURB CONSTRUCTION MAY BE DELETED WHEN CONSTRUCTING DRIVEWAY ADJACENT TO AN EXISTING HEADER CURB THAT IS A MINIMUM OF 9" DEEP WITH AT LEAST ONE HORIZONTAL BAR. INSTALL AN EXPANSION JOINT BETWEEN THE EXISTING HEADER CURB AND DRIVEWAY.

CITY OF BOERNE

NON-RESIDENTIAL
CONCRETE DRIVEWAY APPROACH
SIDEWALK AT ROW LINE

SCALE:	DRAWING No.	DATE:
N.T.S.	02502-3.1A	JULY 2015

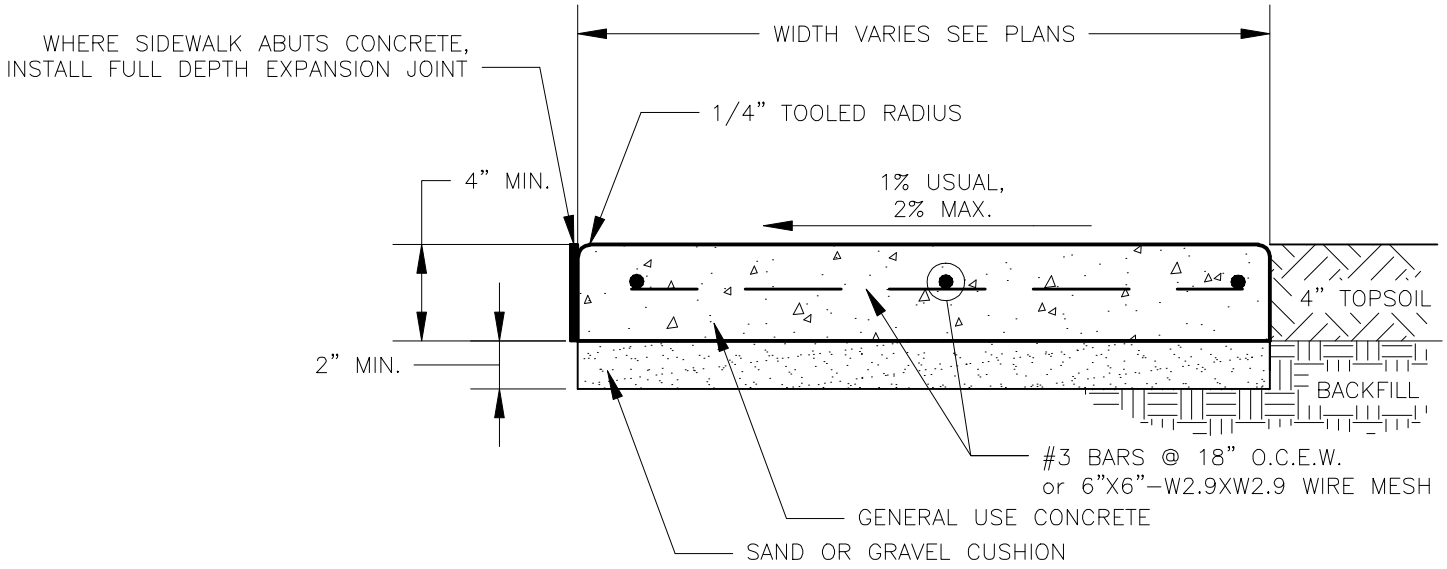

TYPICAL SIDEWALK SECTION

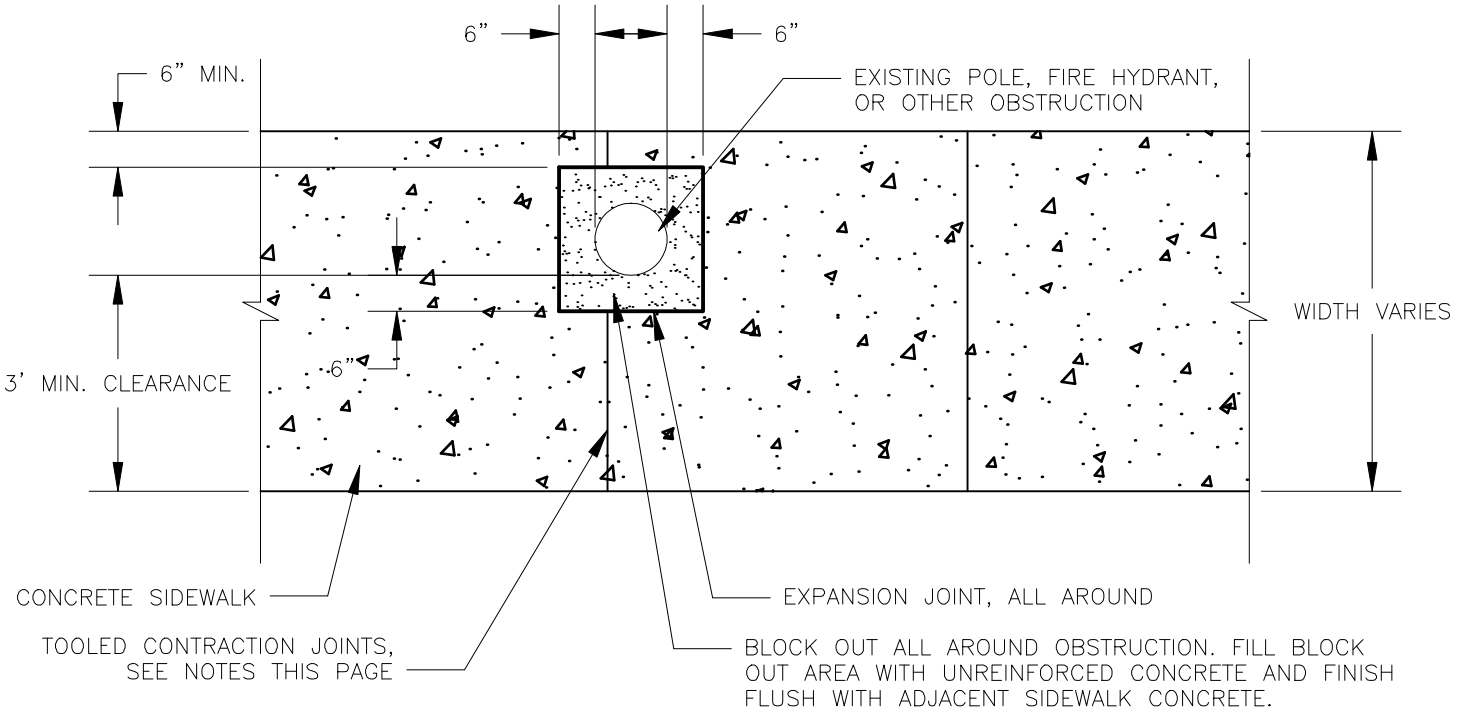

SIDEWALK PLAN WITH BLOCK OUT FOR OBSTRUCTION

NOTES:

1. WIDEN SIDEWALK AS NECESSARY TO MAINTAIN A CLEAR PATH 3' WIDE PAST OBSTRUCTIONS INCLUDING UTILITY POLES, STREET SIGNS, MAIL BOXES, ETC.
2. PROVIDE CONTRACTION AND EXPANSION JOINTS AS FOLLOWS:
   - 4 FT WIDE SIDEWALK: TOOLED CONTRACTION JOINTS AT 4 FT INTERVALS, EXPANSION JOINTS AT 48 FT INTERVALS.
   - 5 FT WIDE SIDEWALK: TOOLED CONTRACTION JOINTS AT 5 FT INTERVALS, EXPANSION JOINTS AT 50 FT INTERVALS.
   - 6 FT AND WIDER SIDEWALKS: TOOLED CONTRACTION JOINTS AT 6 FT INTERVALS AND EXPANSION JOINTS AT 48 FT INTERVALS.

CITY OF BOERNE

CONCRETE SIDEWALK

SCALE:	DRAWING No.	DATE:
N.T.S.	02502-4.0	JULY 2015

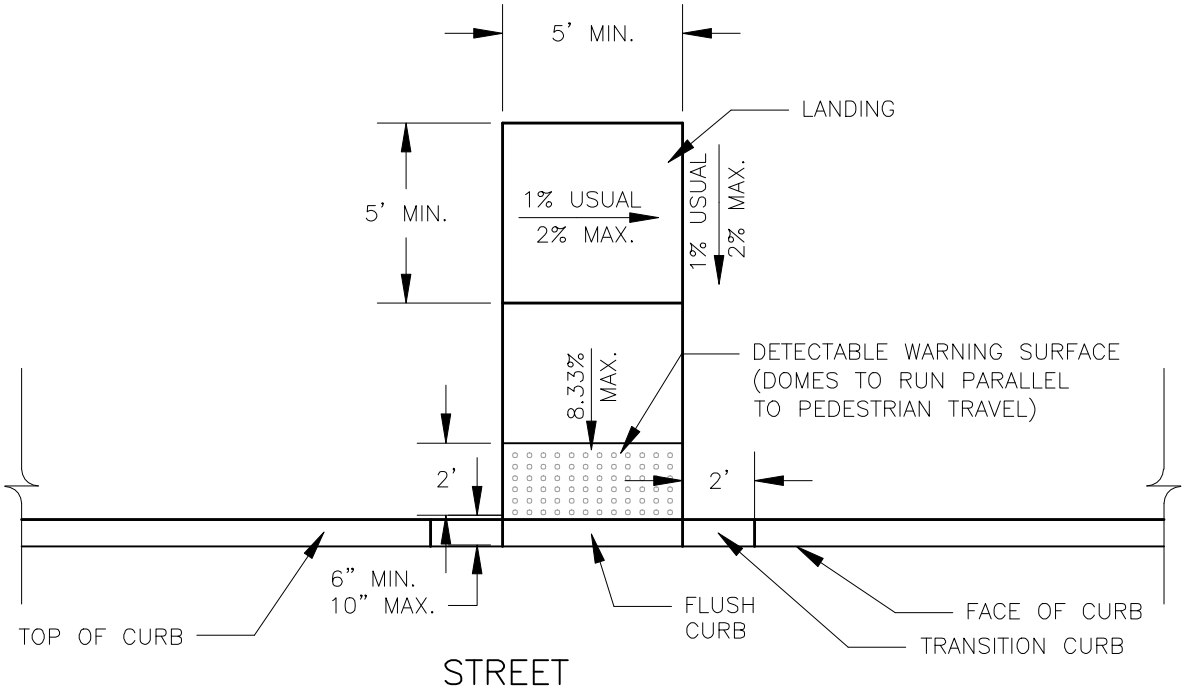

CURB RAMP IN PERPENDICULAR SIDEWALK

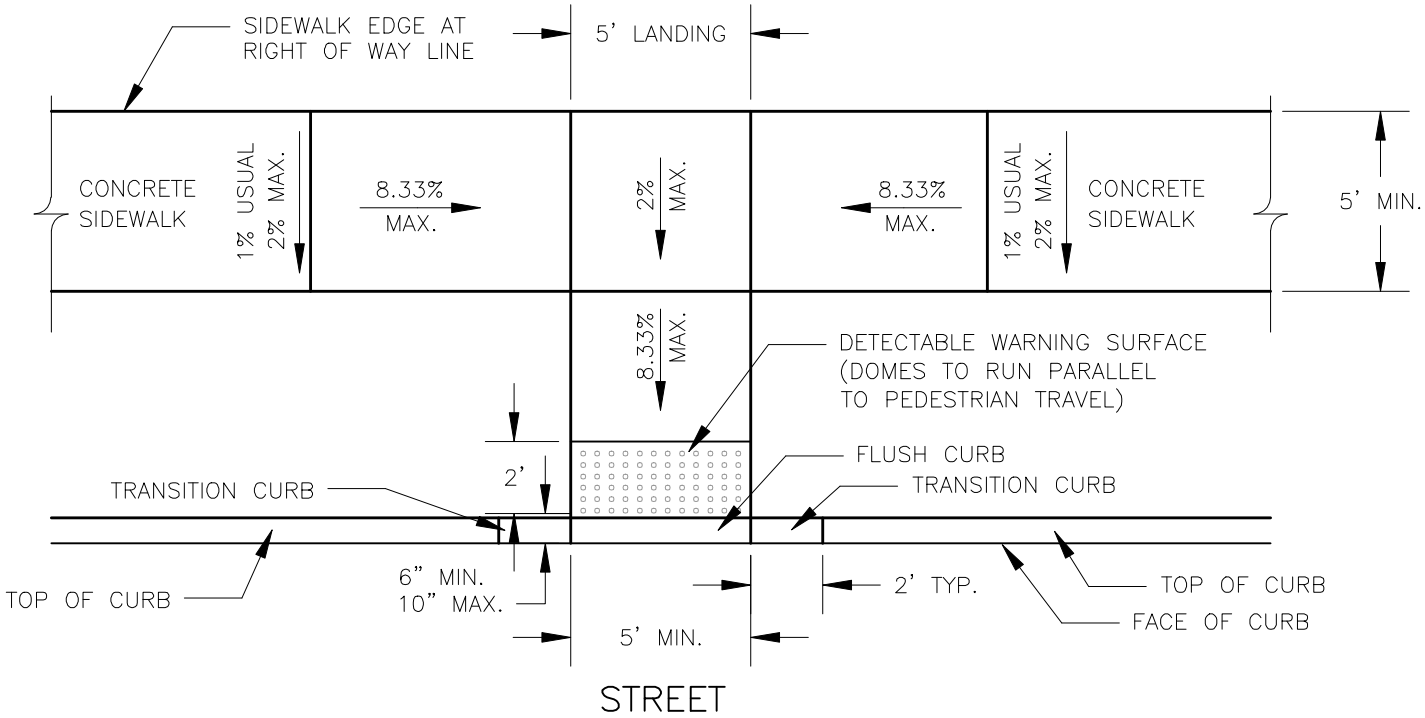

RAMP IN PARALLEL SIDEWALK WITH PERPENDICULAR CURB RAMP

NOTE: LONGITUDINAL SLOPE OF SIDEWALK CANNOT EXCEED 5% WITHOUT A RAMP UNLESS THE SLOPE OF THE CURB AND ROADWAY EXCEEDS 5% AND THE SIDEWALK MATCHES THE CURB AND ROADWAY SLOPE. RAMPS CANNOT EXCEED A LONGITUDINAL SLOPE OF 8.33% AND MUST HAVE A FIVE FOOT SQUARE LANDING AT EACH END.

CITY OF BOERNE

SIDEWALK CURB RAMPS
SIDEWALK AT ROW LINE

SCALE:	DRAWING No.	DATE:
N.T.S.	02502-4.1	JULY 2015

NOTE: LONGITUDINAL SLOPE OF SIDEWALK CANNOT EXCEED 5% WITHOUT A RAMP UNLESS THE SLOPE OF THE CURB AND ROADWAY EXCEEDS 5% AND THE SIDEWALK MATCHES THE CURB AND ROADWAY SLOPE. RAMPS CANNOT EXCEED A LONGITUDINAL SLOPE OF 8.33% AND MUST HAVE A FIVE FOOT SQUARE LANDING AT EACH END.

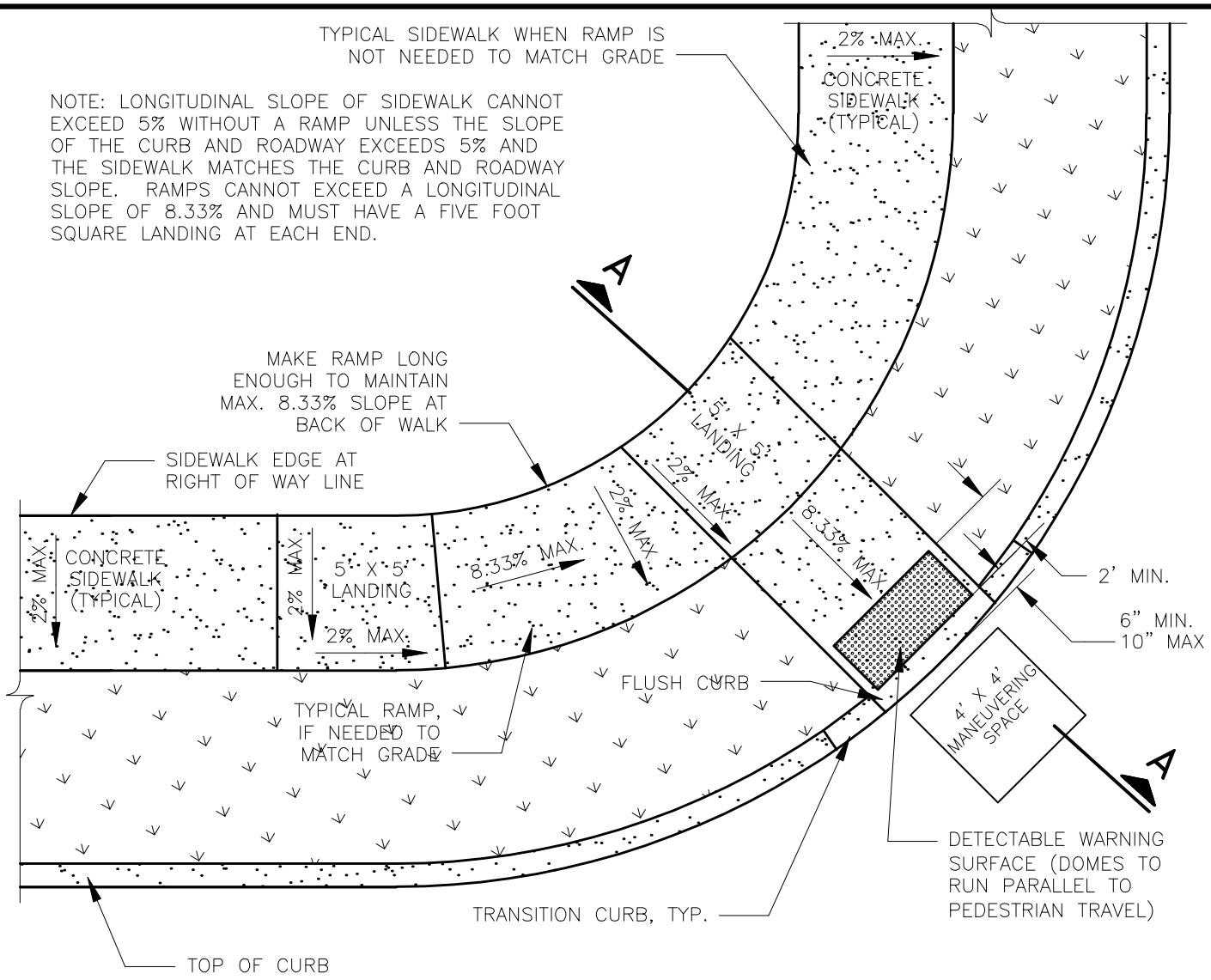

PLAN

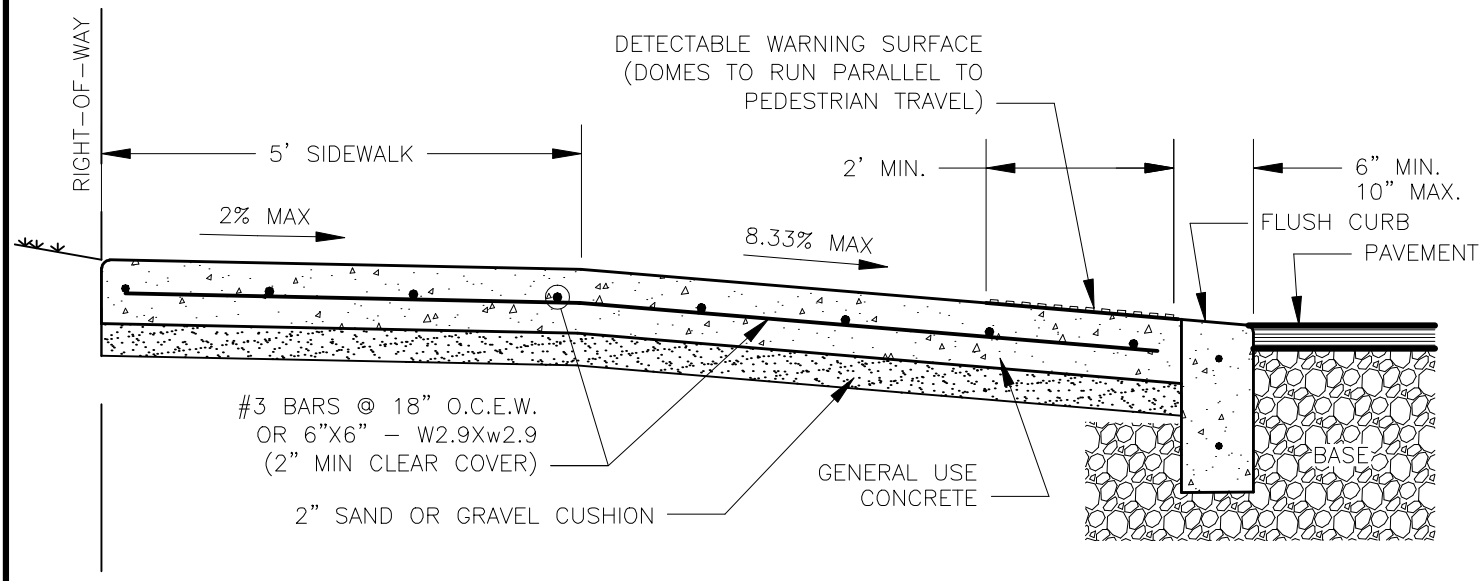

SECTION A–A

CITY OF BOERNE

SIDEWALK CURB RAMP ON RADIUS SIDEWALK AT ROW LINE

SCALE:	DRAWING No.	DATE:
N.T.S.	02502–4.2	JULY 2015

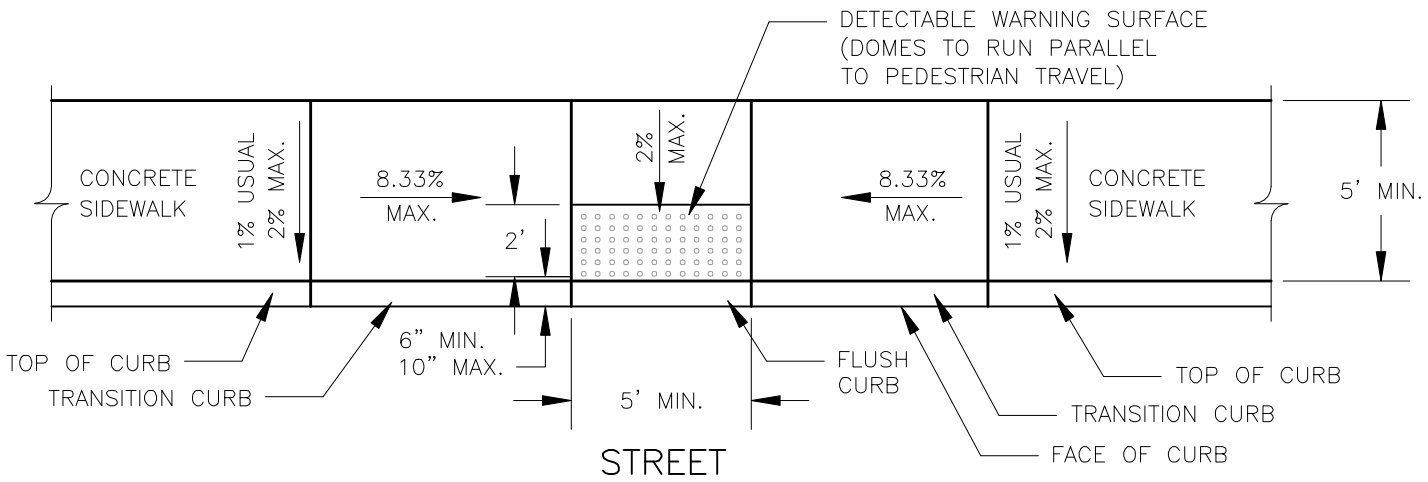

CURB RAMP IN PARALLEL/ADJACENT SIDEWALK

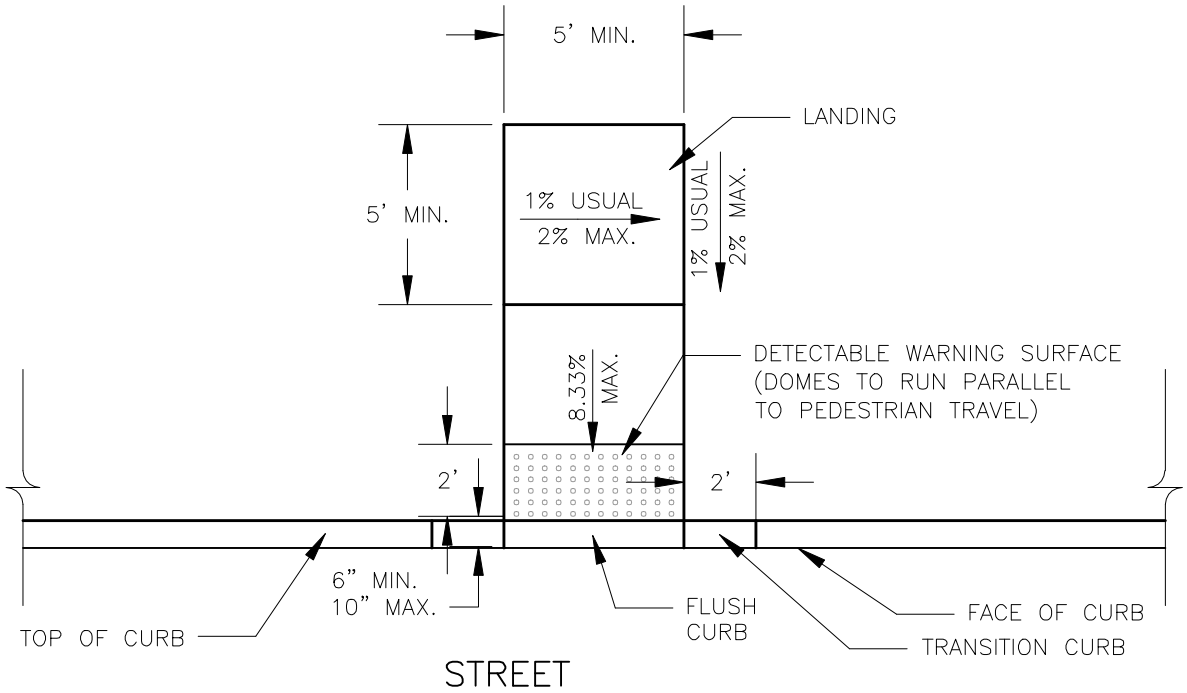

CURB RAMP IN PERPENDICULAR SIDEWALK

NOTE: LONGITUDINAL SLOPE OF SIDEWALK CANNOT EXCEED 5% WITHOUT A RAMP UNLESS THE SLOPE OF THE CURB AND ROADWAY EXCEEDS 5% AND THE SIDEWALK MATCHES THE CURB AND ROADWAY SLOPE. RAMPS CANNOT EXCEED A LONGITUDINAL SLOPE OF 8.33% AND MUST HAVE A FIVE FOOT SQUARE LANDING AT EACH END.

CITY OF BOERNE

SIDEWALK CURB RAMPS
SIDEWALK AT CURB

SCALE:	DRAWING No.	DATE:
N.T.S.	02502-4.3	JULY 2015

NOTE: LONGITUDINAL SLOPE OF SIDEWALK CANNOT EXCEED 5% WITHOUT A RAMP UNLESS THE SLOPE OF THE CURB AND ROADWAY EXCEEDS 5% AND THE SIDEWALK MATCHES THE CURB AND ROADWAY SLOPE. RAMPS CANNOT EXCEED A LONGITUDINAL SLOPE OF 8.33% AND MUST HAVE A FIVE FOOT SQUARE LANDING AT EACH END.

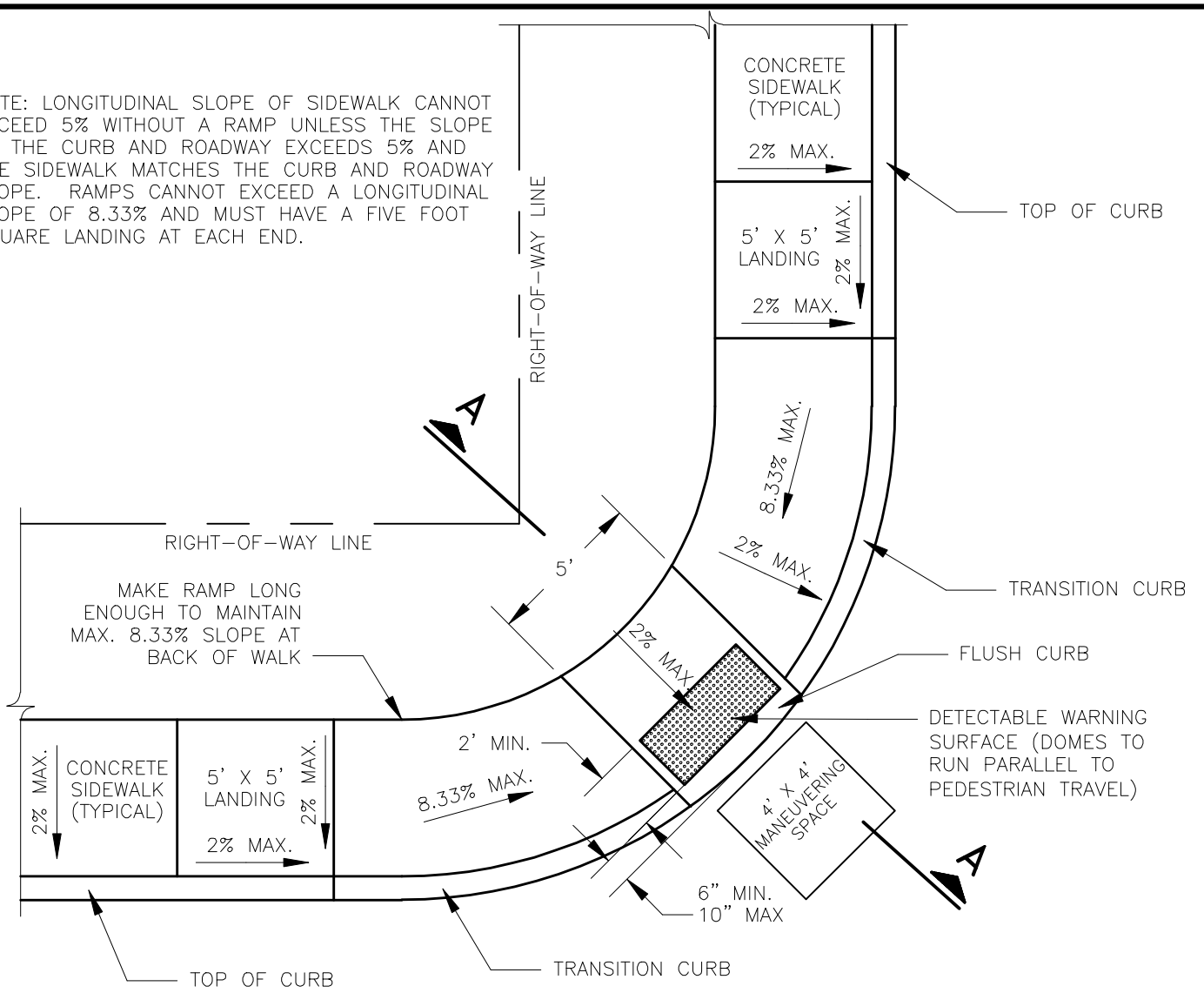

PLAN

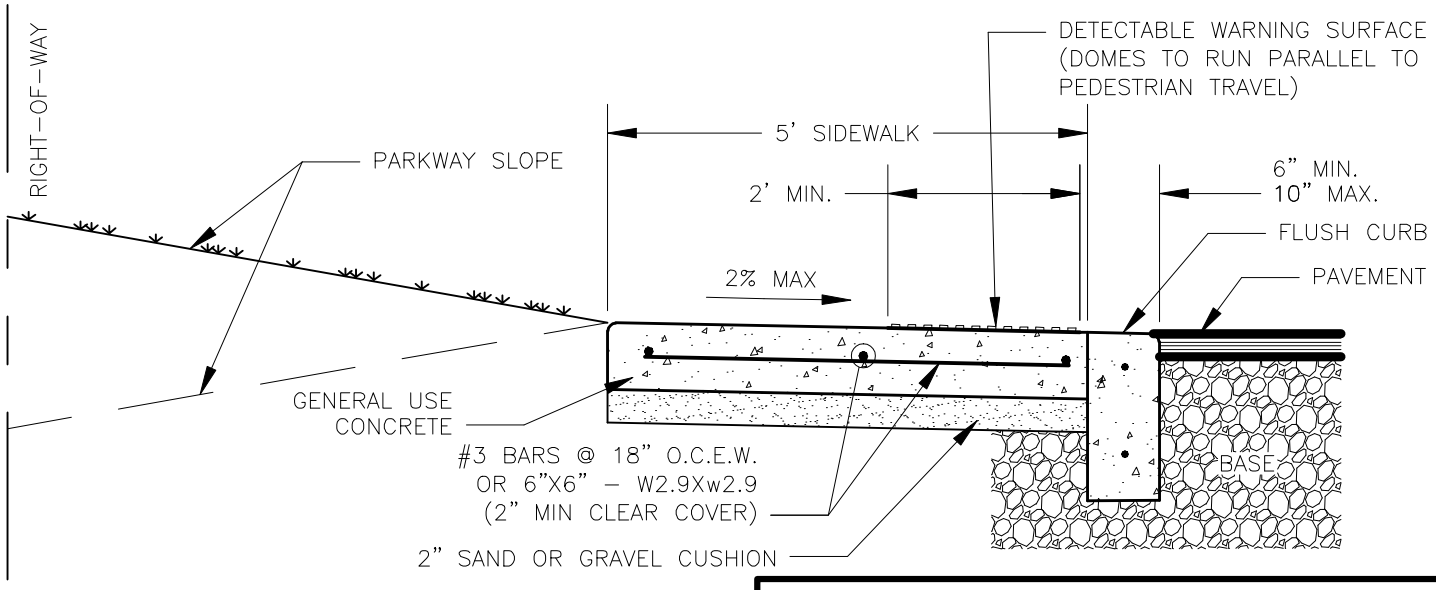

SECTION A-A

CITY OF BOERNE

SIDEWALK CURB RAMP ON RADIUS SIDEWALK AT CURB

SCALE:	DRAWING No.	DATE:
N.T.S.	02502-4.4	JULY 2015

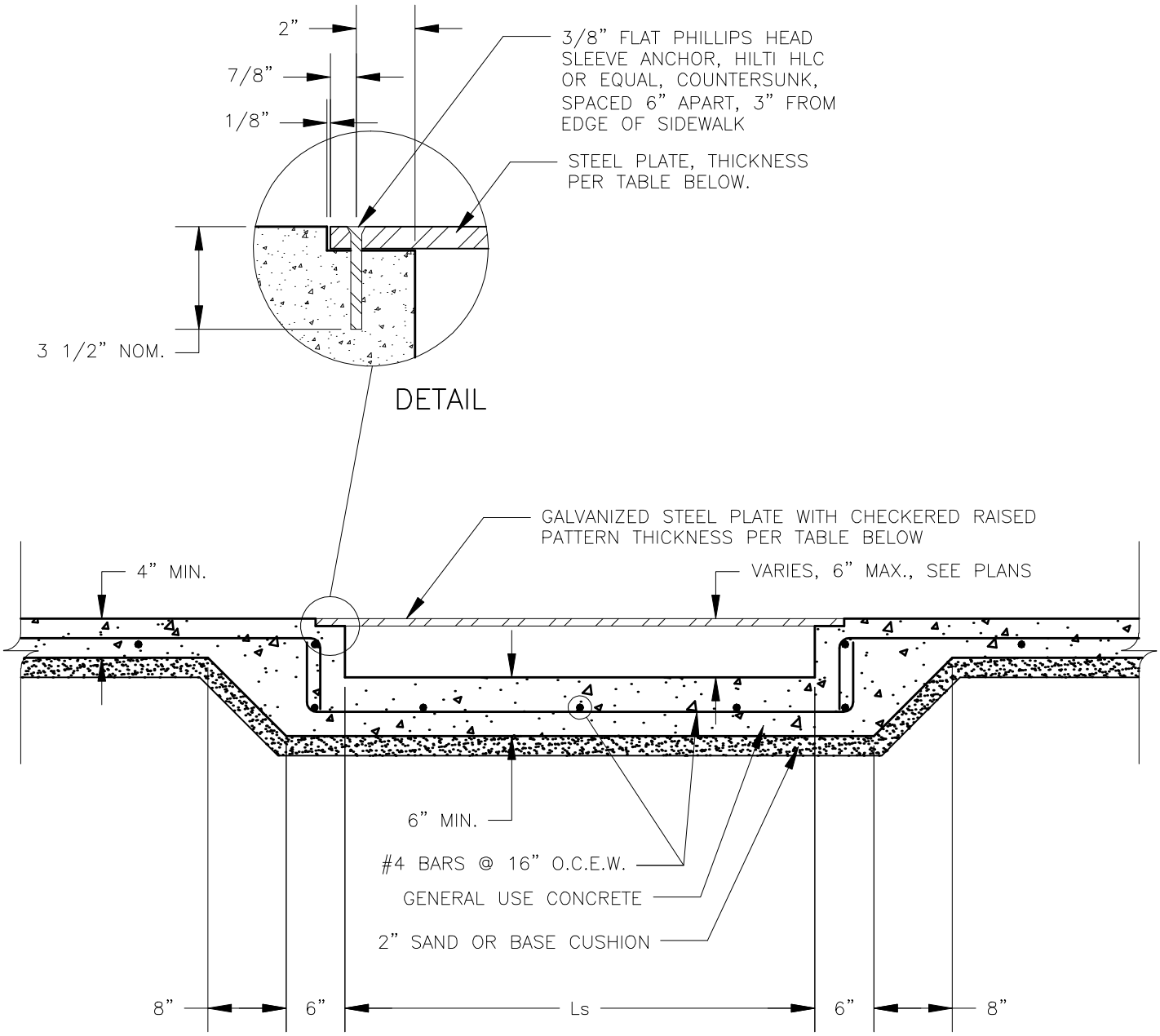

STEEL PLATE

THICKNESS	Ls
3/8"	0' – 2'
1/2"	2' – 3'
5/8"	3' – 4'
3/4"	4' – 5'

CITY OF BOERNE

SIDEWALK UNDERDRAIN

SCALE:	DRAWING No.	DATE:
N.T.S.	02502–4.5	JULY 2015

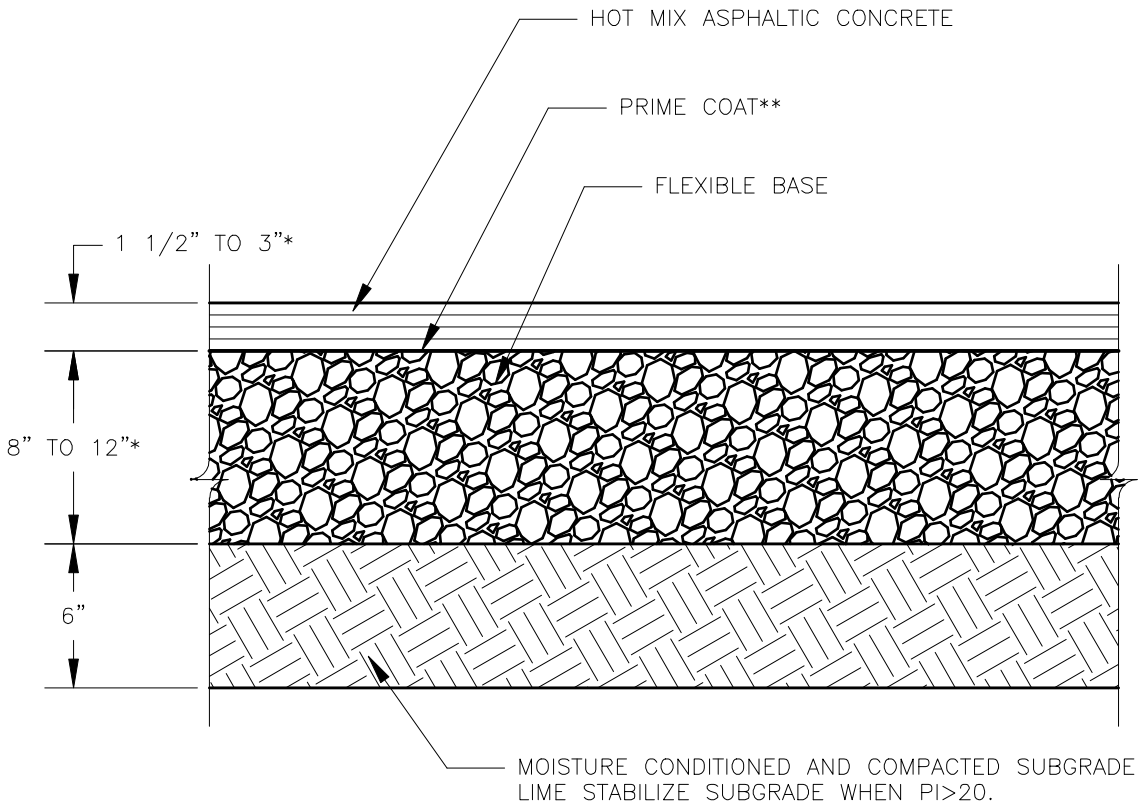

*THICKNESS VARIES DEPENDING UPON PAVEMENT DESIGN. REFER TO PLAN X-SECTIONS AND DETAILS FOR SPECIFIED PAVEMENT DESIGN.

**PROVIDE TACK COAT IN ADDITION TO PRIME COAT IMMEDIATELY PRIOR TO PLACING ASPHALTIC CONCRETE AS NEEDED TO SEAL AND ENSURE ADHERENCE.

CITY OF BOERNE

ASPHALTIC CONCRETE PAVEMENT SECTION

SCALE:	DRAWING No.	DATE:
N.T.S.	02513-1.0	JULY 2015

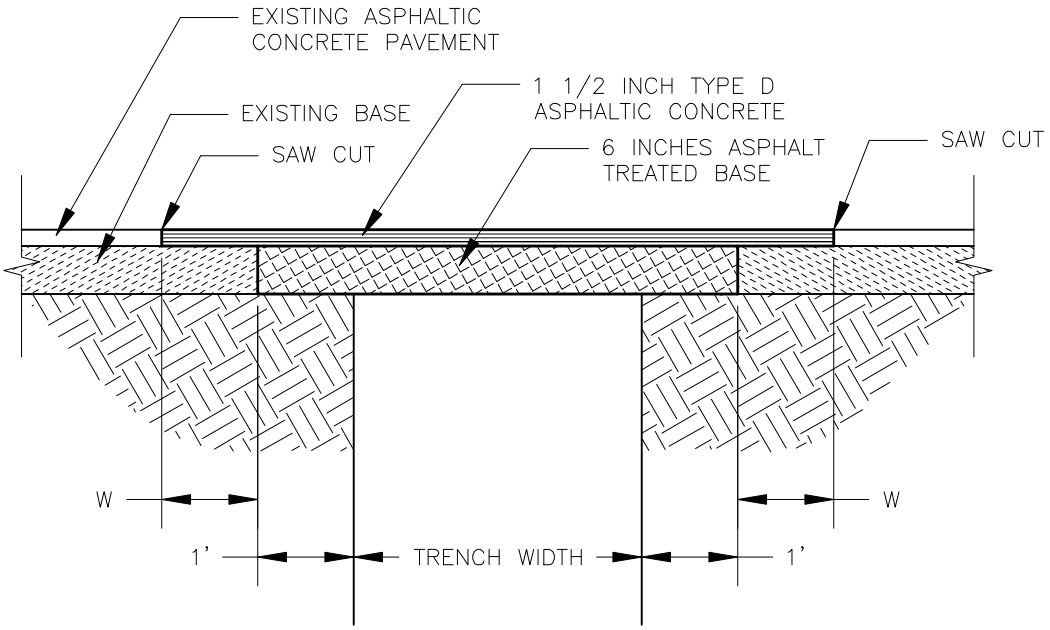

PCI RANGE	ADDITIONAL WIDTH OF ASPHALT REPAIR
PCI<50	W=1'
50≤PCI<85	W=10' and CURB–TO–CURB
85≤PCI≤100	CURB–TO–CURB and BLOCK–TO–BLOCK

CITY OF BOERNE

ASPHALTIC CONCRETE PAVEMENT REPAIR

SCALE:	DRAWING No.	DATE:
N.T.S.	02513–1.1	JULY 2015

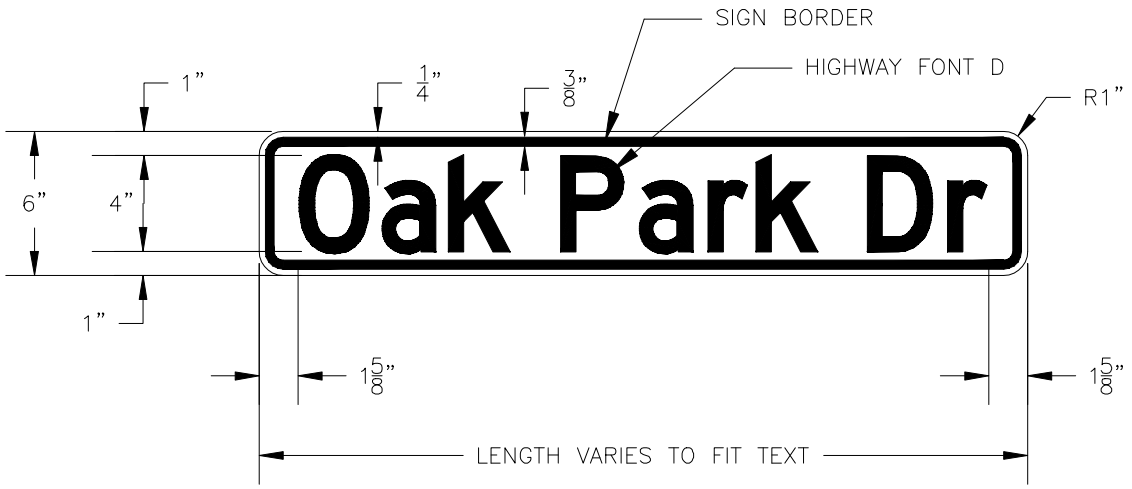

NOTES:

FOR PUBLIC STREETS:
BACKGROUND COLOR: WHITE
LEGEND AND BORDER: BLACK

FOR PRIVATE STREETS:
BACKGROUND COLOR: BLACK
LEGEND AND BORDER: WHITE

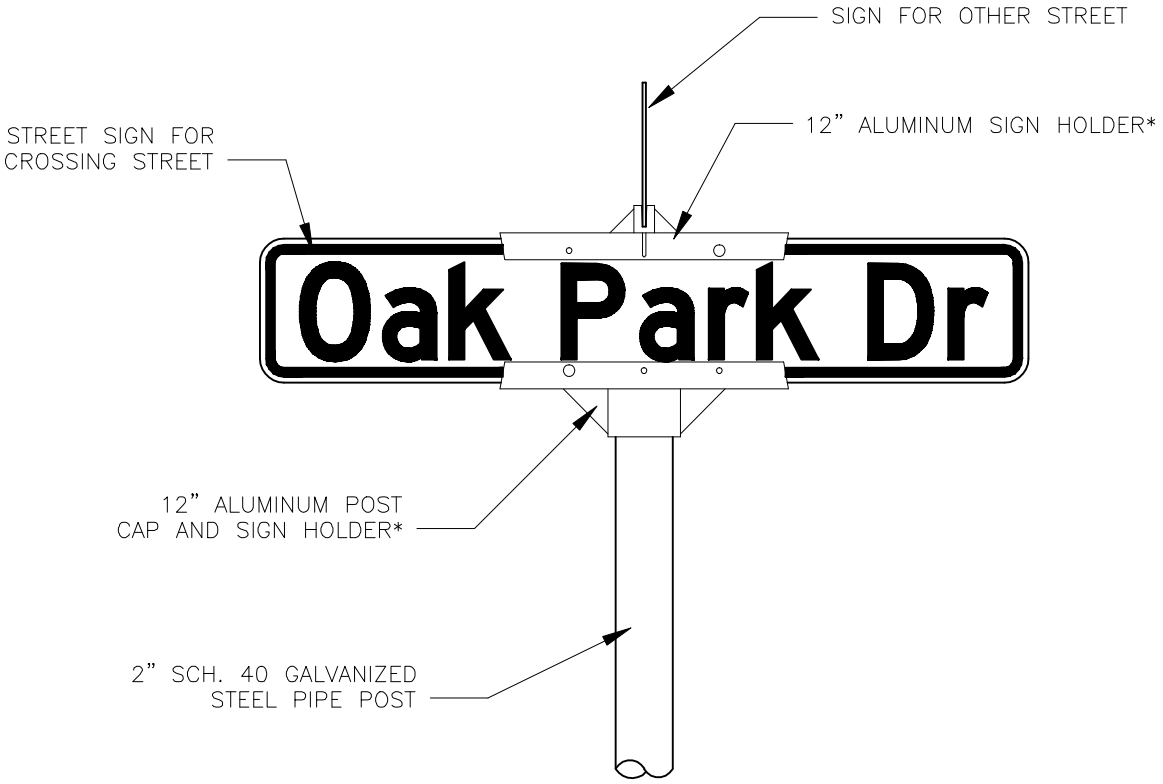

*USE 12" ALUMINUM SIGN HOLDERS FOR SIGNS > 24" IN LENGTH, FOR SHORTER SIGNS USE 5" HOLDERS.

CITY OF BOERNE		
STREET SIGN		
SCALE: N.T.S.	DRAWING No. 02514-1.0	DATE: JULY 2015

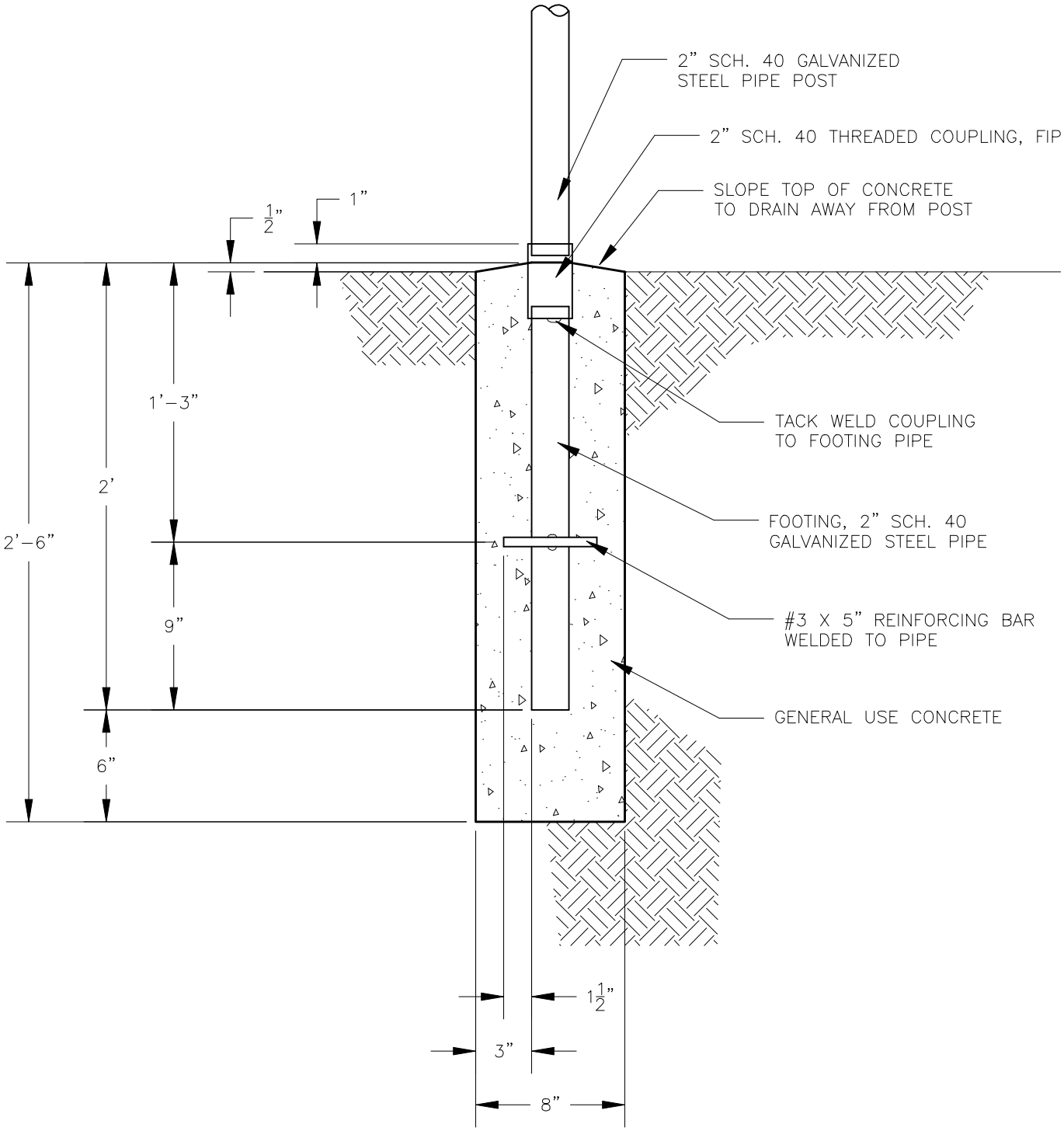

CITY OF BOERNE

SIGN POST AND FOUNDATION

SCALE:	DRAWING No.	DATE:
N.T.S.	02514-1.1	JULY 2015

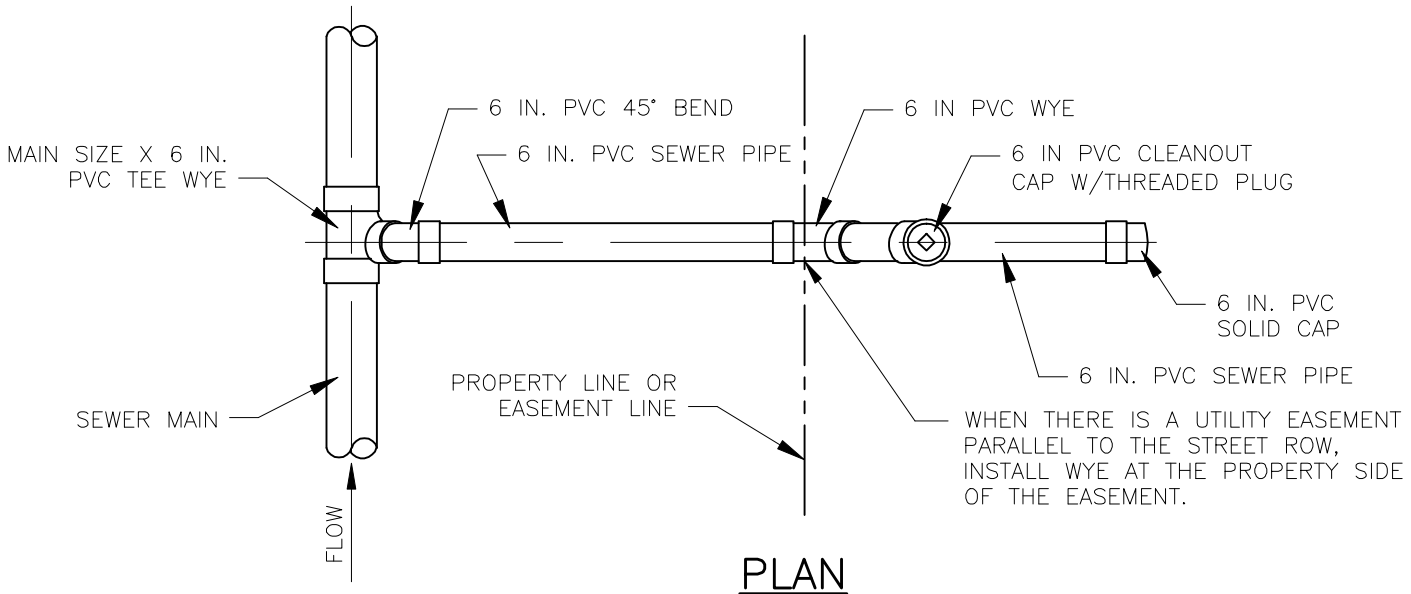

PLAN

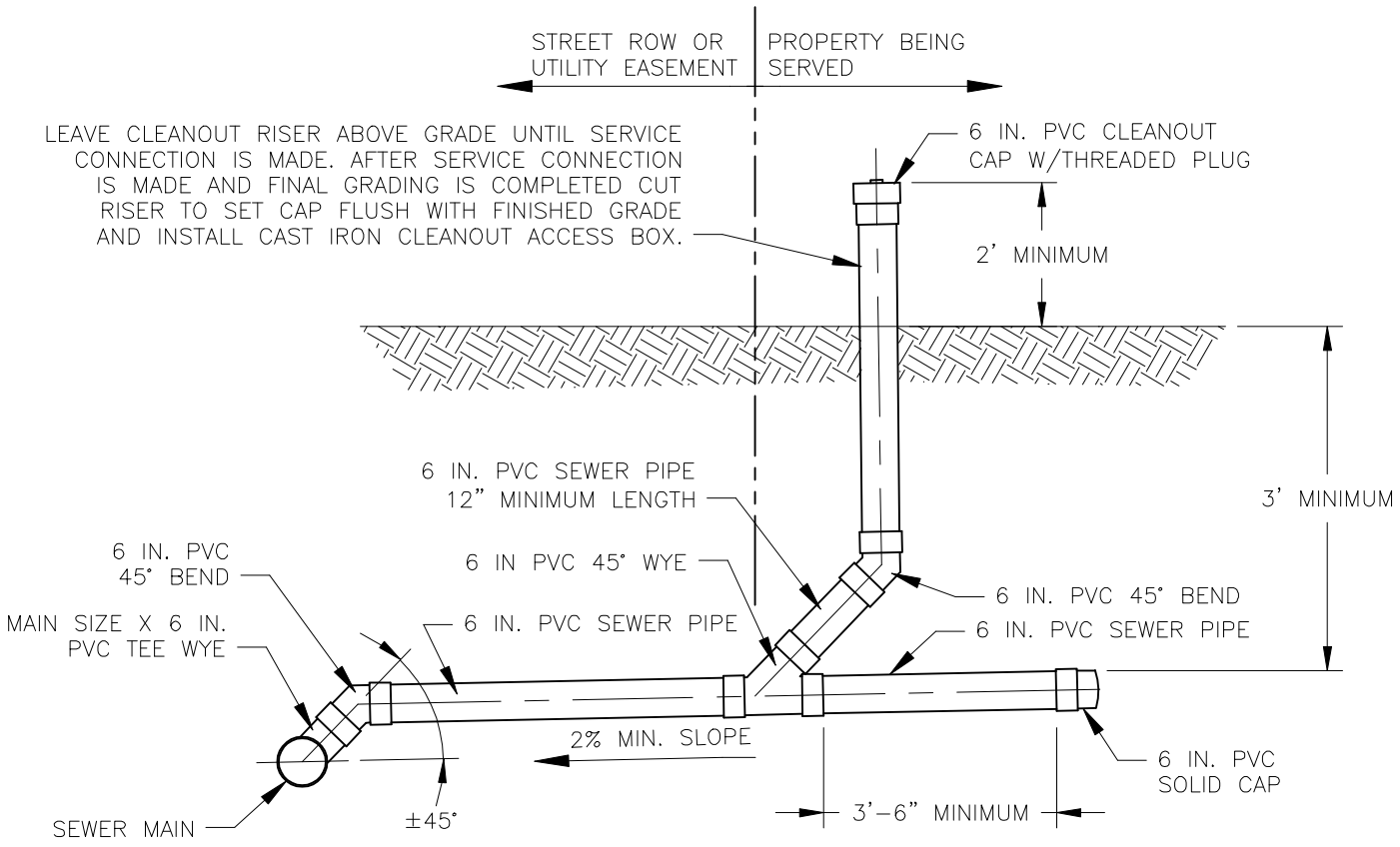

SECTION

CITY OF BOERNE

STANDARD SANITARY SEWER SERVICE LATERAL

SCALE:	DRAWING No.	DATE:
N.T.S.	02530-1.0	JULY 2015

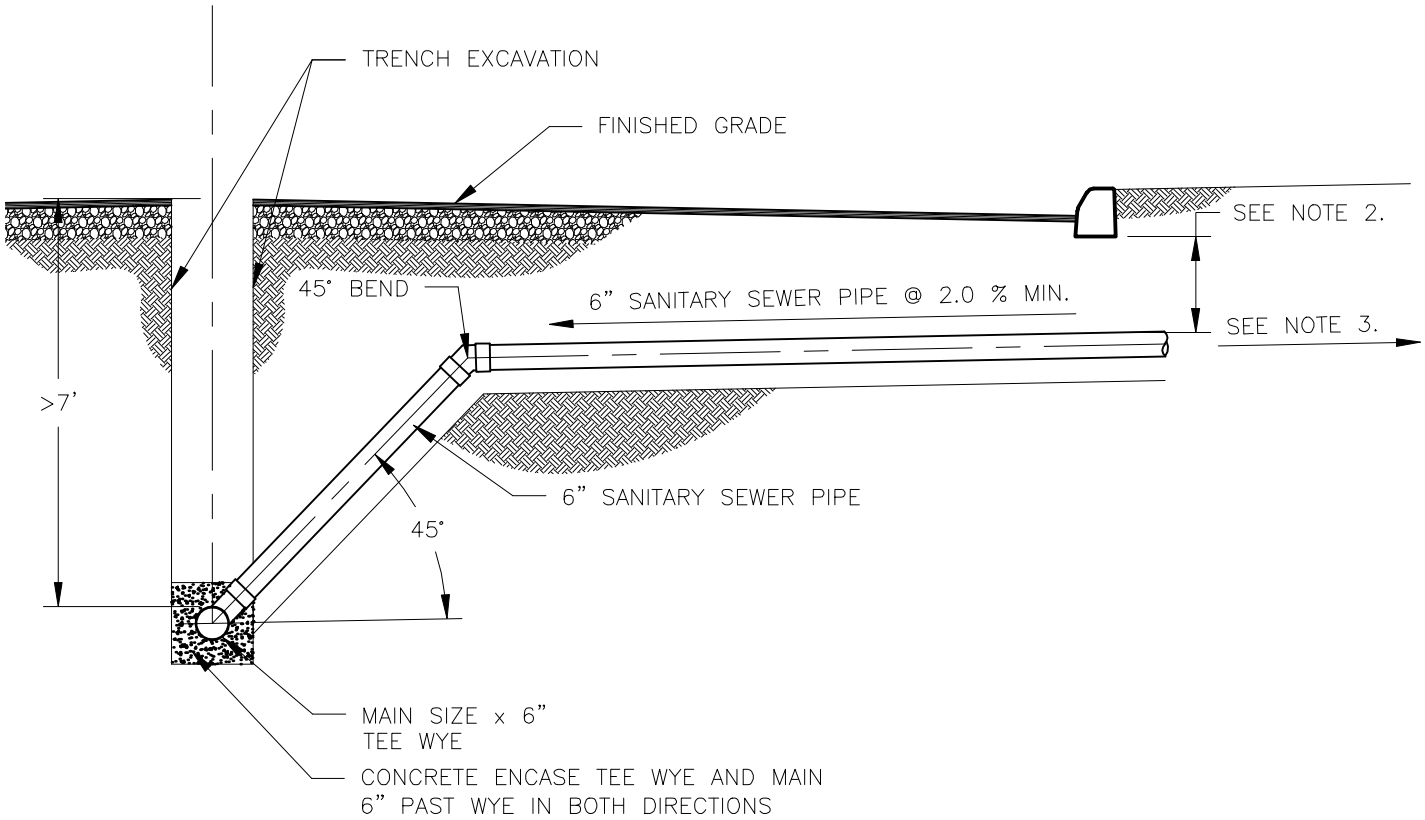

NOTES:
1. USE DEEP SANITARY SEWER SERVICE LATERAL WHEN THE MAIN DEPTH IS GREATER THAN 7' BELOW FINISHED GRADE.
2. INSTALL SERVICE LATERAL 2' MINIMUM BELOW CURB, OR 3' MINIMUM BELOW FINISHED GRADE WHEN NOT IN STREET. INSTALL SERVICE DEEPER WHEN LOT BEING SERVED SLOPES AWAY FROM SEWER MAIN. LATERAL DEPTH AT CURB OR PROPERTY LINE SHOULD NOT EXCEED 7'.
3. COMPLETE DEEP SANITARY SEWER SERVICE LATERAL AS PER THE STANDARD SANITARY SEWER SERVICE LATERAL DETAIL.

CITY OF BOERNE

DEEP SANITARY SEWER SERVICE LATERAL

SCALE:	DRAWING No.	DATE:
N.T.S.	02530-1.1	JULY 2015

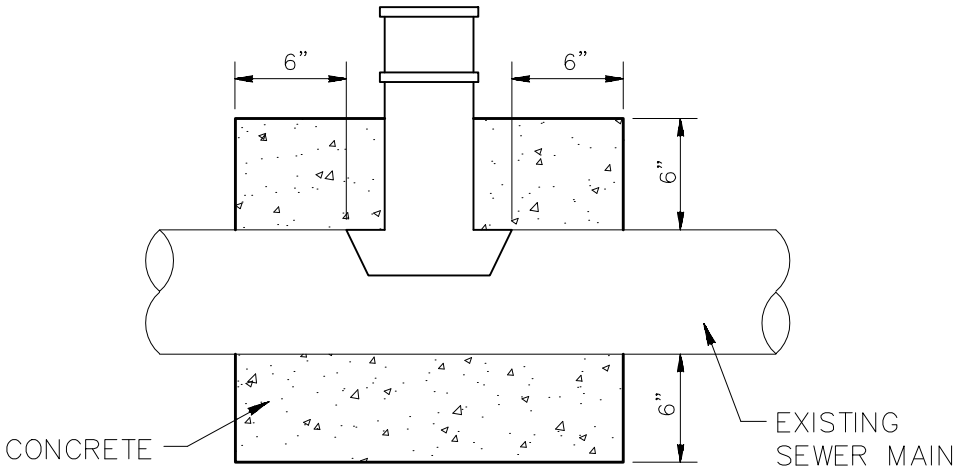

PLAN

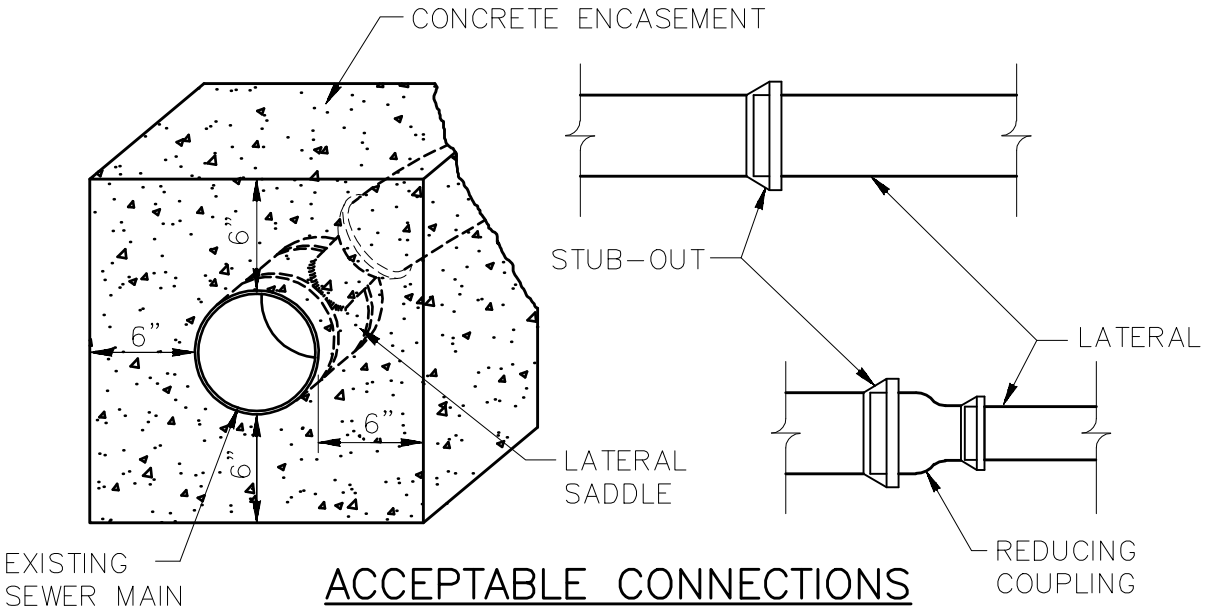

ACCEPTABLE CONNECTIONS

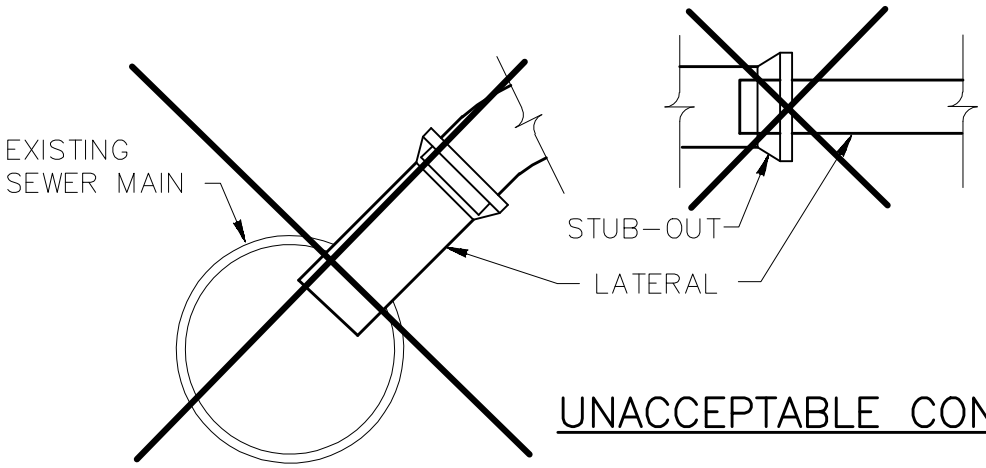

UNACCEPTABLE CONNECTIONS

NOTE:
CONNECT THE SADDLE TO THE EXISTING MAIN PERMANENTLY USING CLAMPS AS RECOMMENDED BY THE MANUFACTURER.

CITY OF BOERNE		
SANITARY SEWER SERVICE SADDLE CONNECTION		
SCALE: N.T.S.	DRAWING No. 02530-1.2	DATE: JULY 2015

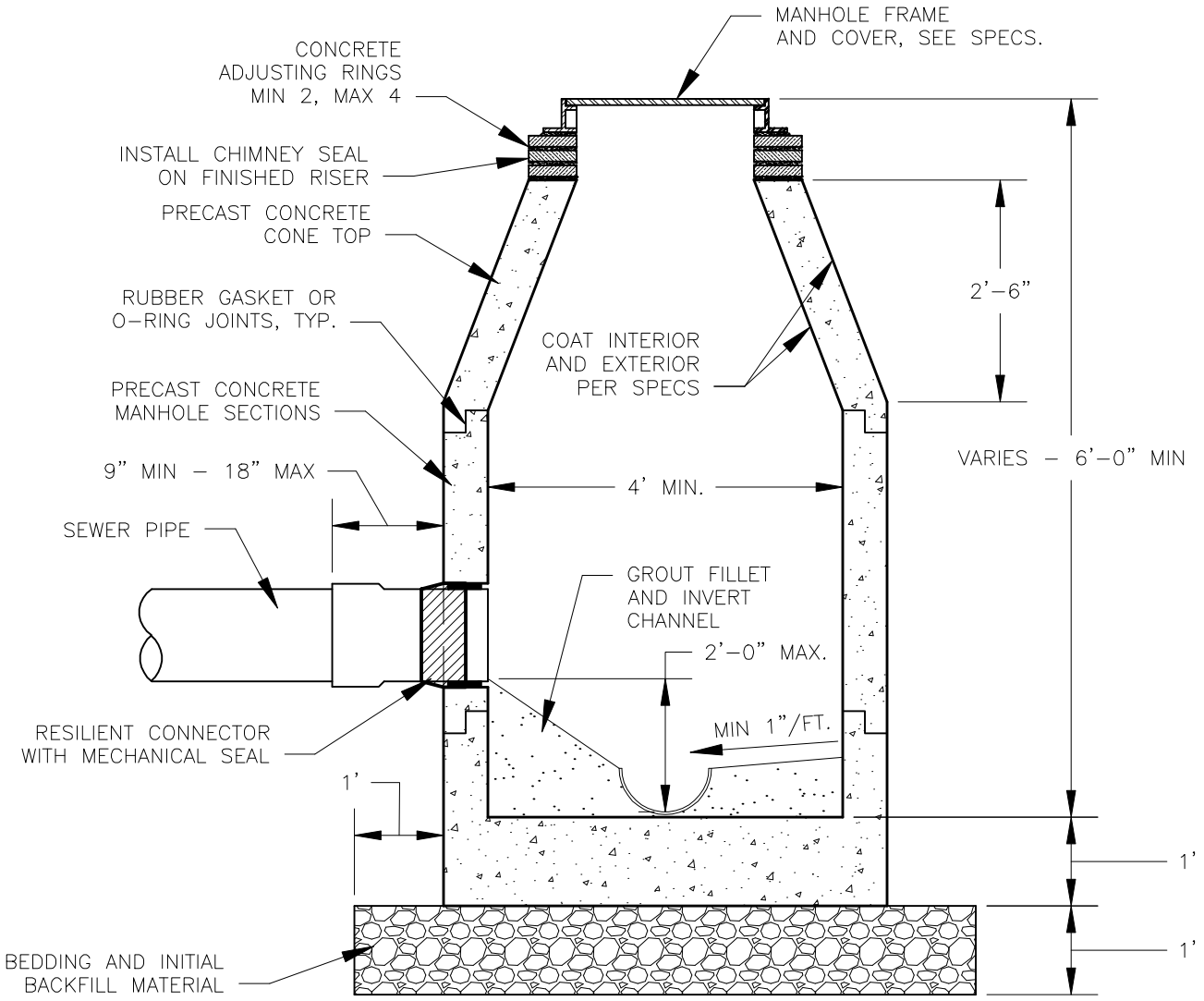

CITY OF BOERNE		
STANDARD SANITARY SEWER MANHOLE		
SCALE: N.T.S.	DRAWING No. 02530-2.0	DATE: JULY 2015

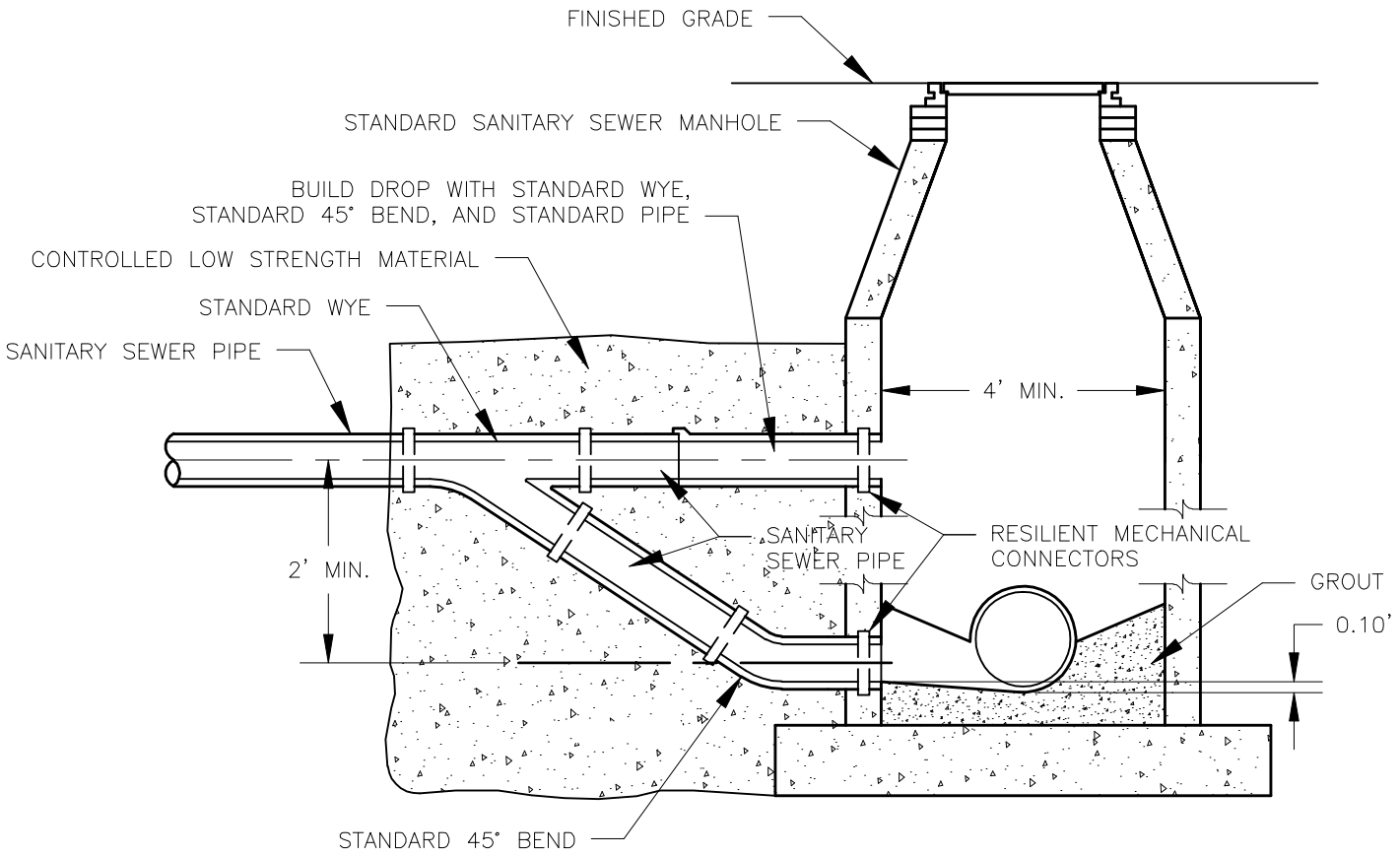

CITY OF BOERNE

SANITARY SEWER DROP MANHOLE

SCALE:	DRAWING No.	DATE:
N.T.S.	02530-2.1	JULY 2015

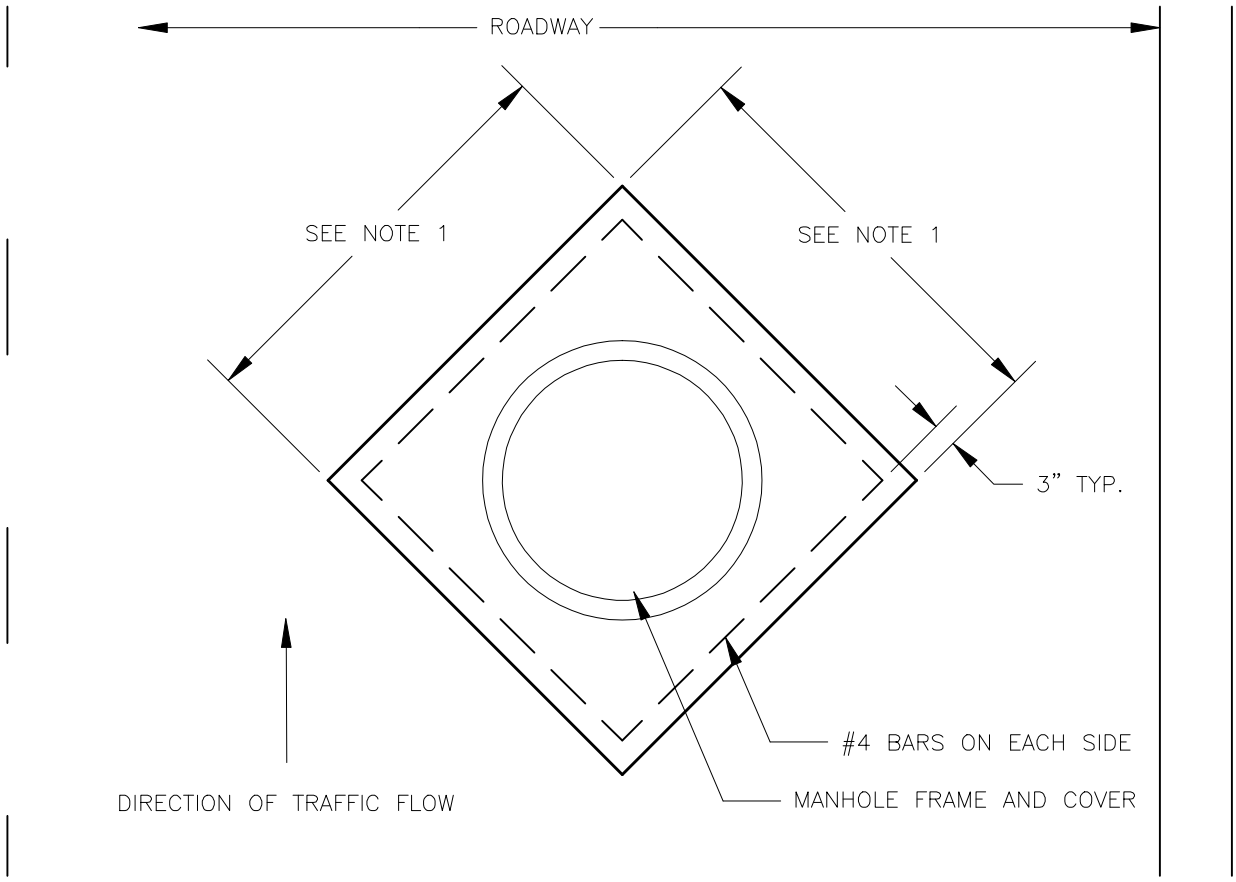

PLAN

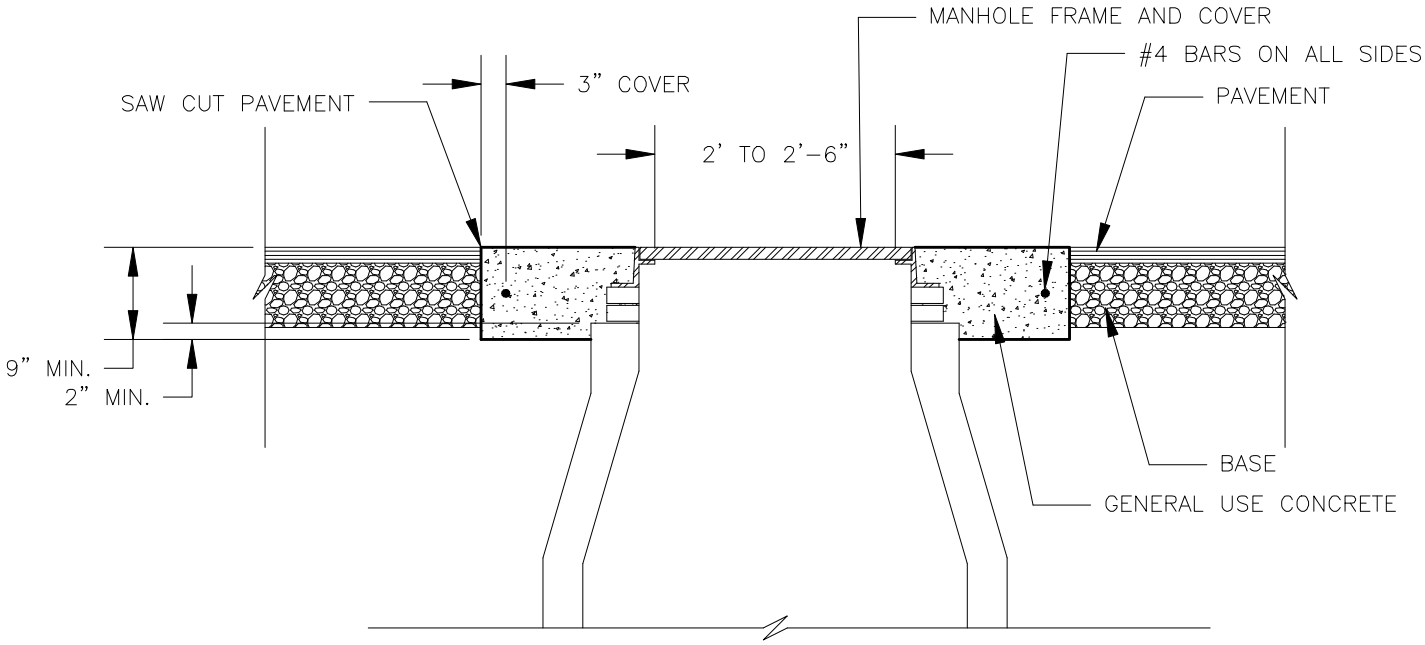

SECTION

NOTES:

1. OUTER DIMENSIONS OF ENCASEMENT SHALL BE 4'-4" FOR MANHOLES WITH 24" COVERS AND 5'-5" FOR MANHOLES WITH 30" COVERS.
2. IN PAVED AREAS, SET TOP OF FRAME TO MATCH PAVEMENT GRADES AND FINISH CONCRETE FLUSH WITH TOP OF FRAME.
3. IN UNPAVED AREAS, SET TOP OF FRAME 1" TO 2" ABOVE FINISHED GRADE AND FINISH CONCRETE FLUSH WITH FINISHED GRADE.
4. CONSTRUCT CONCRETE RING ENCASEMENT ON ALL MANHOLES.

CITY OF BOERNE

MANHOLE RING ENCASEMENT

SCALE:	DRAWING No.	DATE:
N.T.S.	02530-2.2	JULY 2015

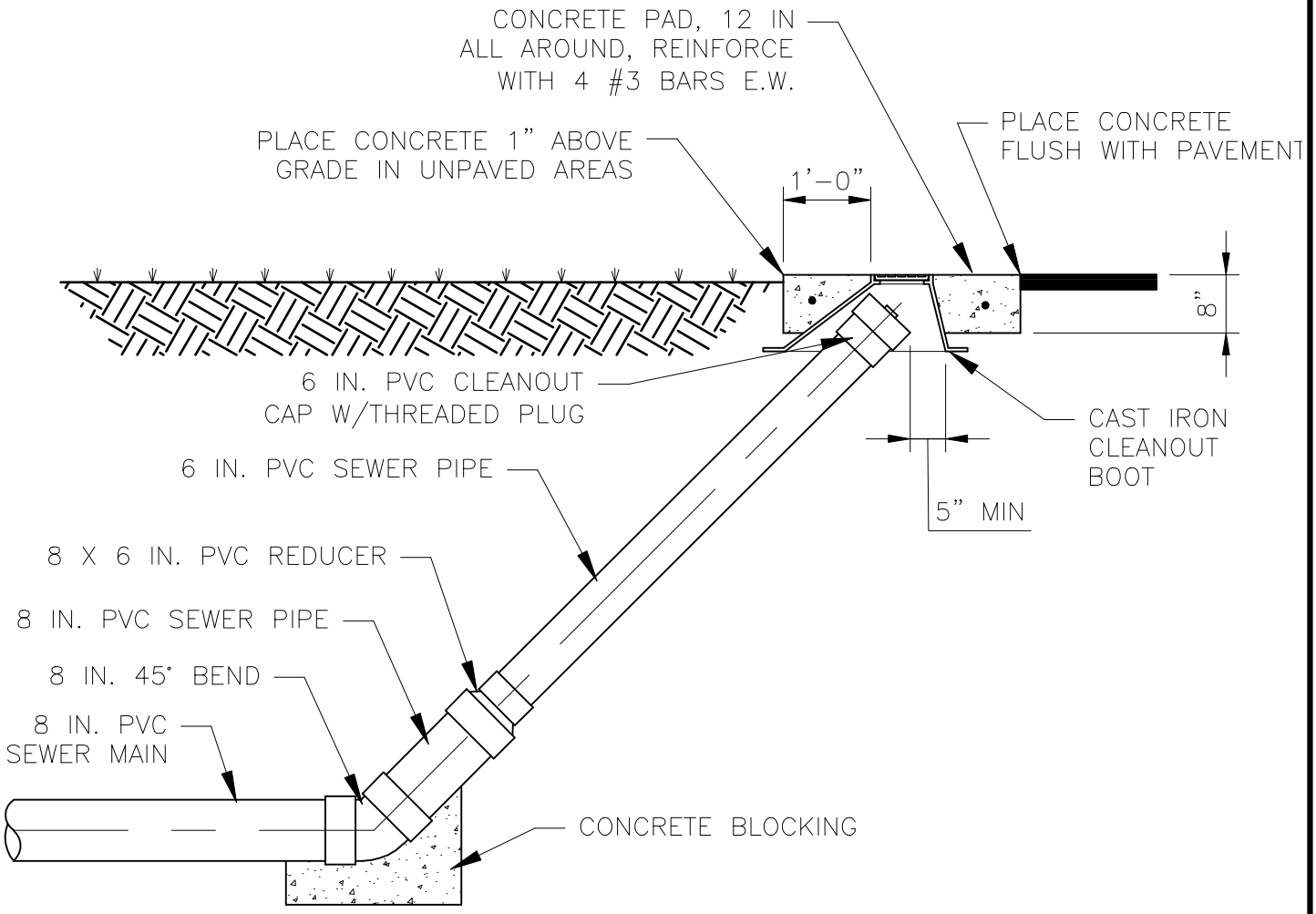

CITY OF BOERNE

END OF SEWER CLEANOUT

SCALE:	DRAWING No.	DATE:
N.T.S.	02530-3.0	JULY 2015

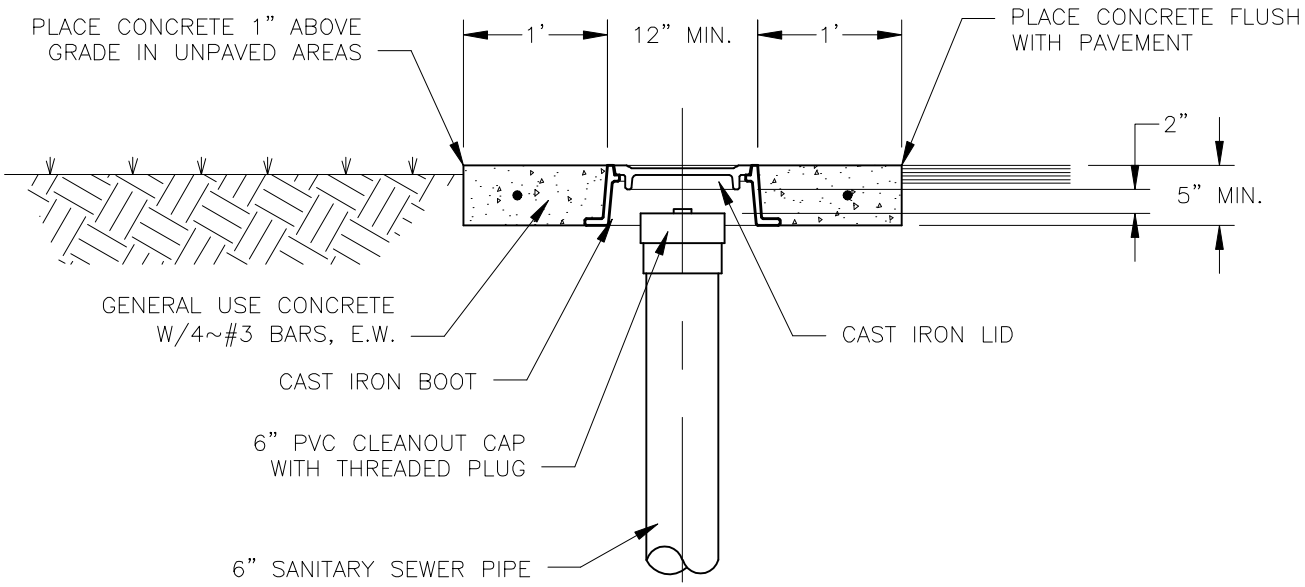

BOOT FOR VERTICAL CLEANOUT RISER

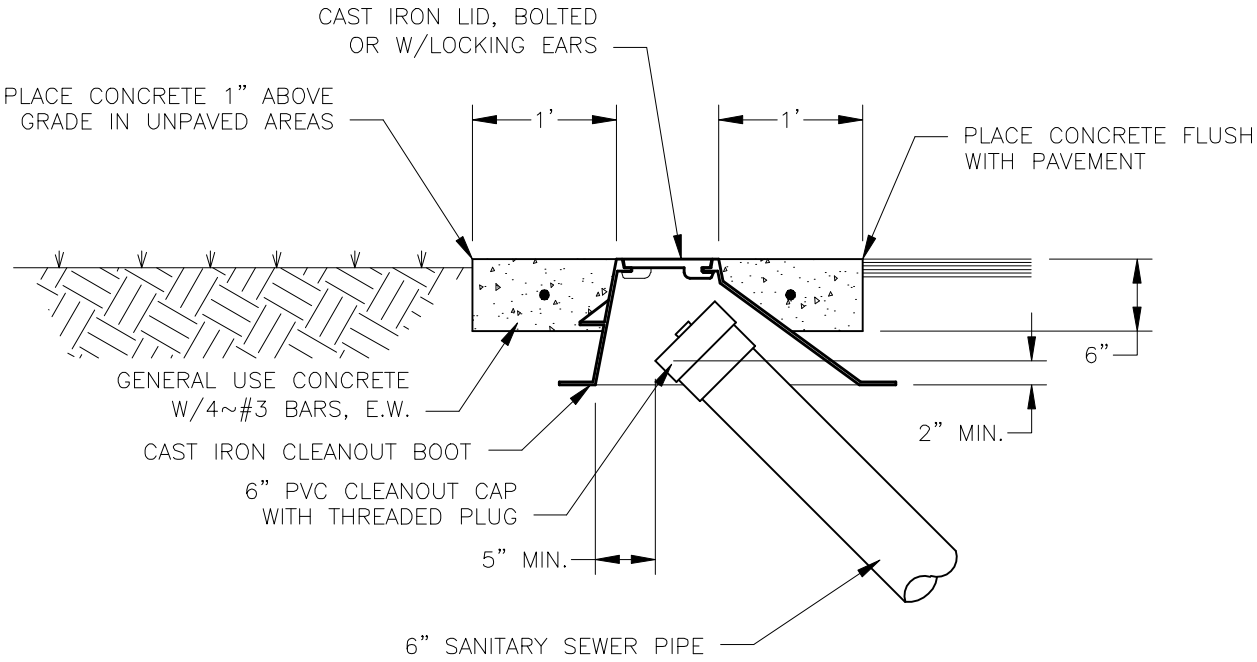

BOOT FOR 45° ANGLE CLEANOUT RISER

CITY OF BOERNE		
CAST IRON CLEANOUT BOOT		
SCALE: N.T.S.	DRAWING No. 02530-3.1	DATE: JULY 2015

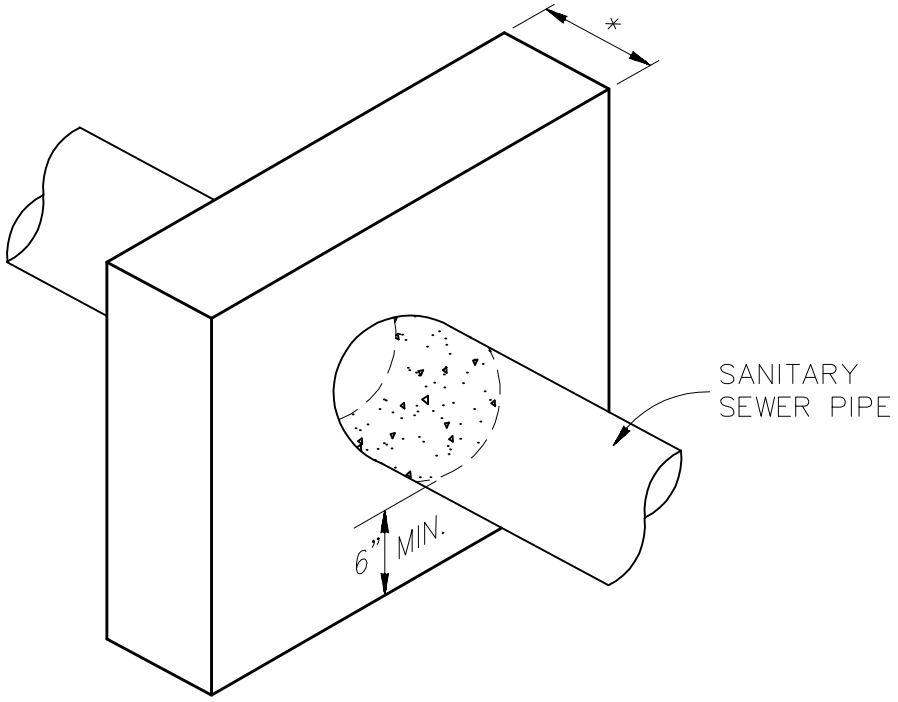

*LENGTH AS SPECIFIED ON DRAWINGS, 12" MIN.

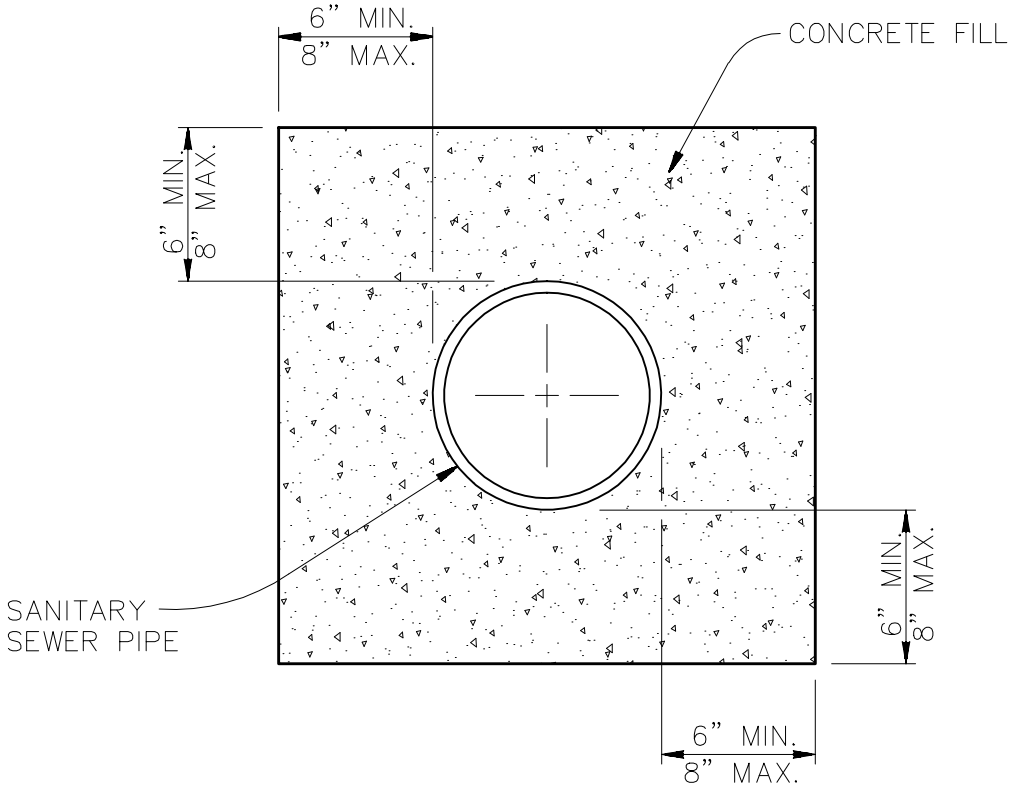

CITY OF BOERNE

SANITARY SEWER CONCRETE ENCASEMENT

SCALE:	DRAWING No.	DATE:
N.T.S.	02530-4.0	JULY 2015

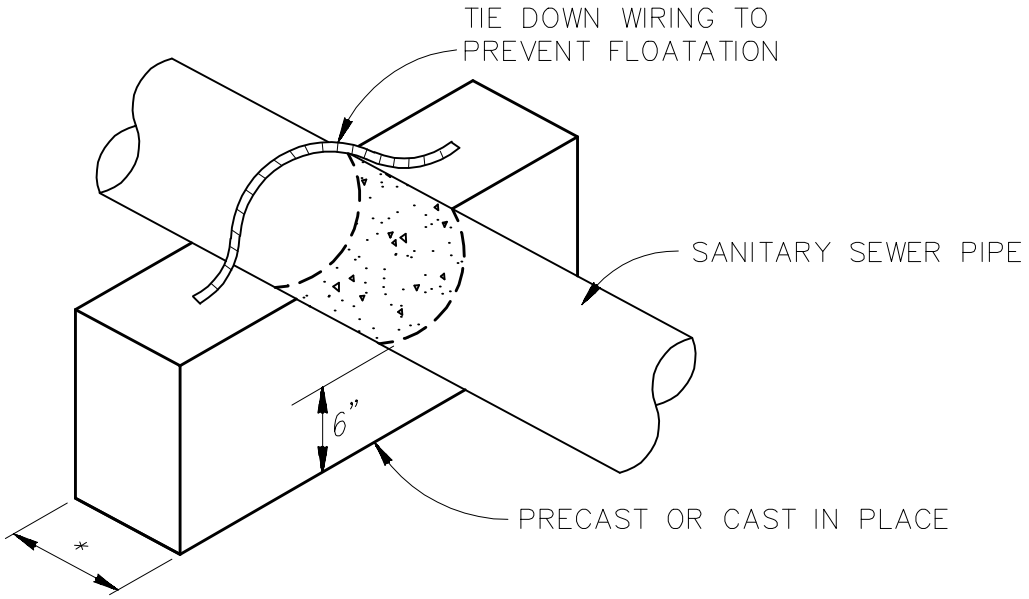

*LENGTH AS SPECIFIED ON DRAWINGS, 12" MIN.

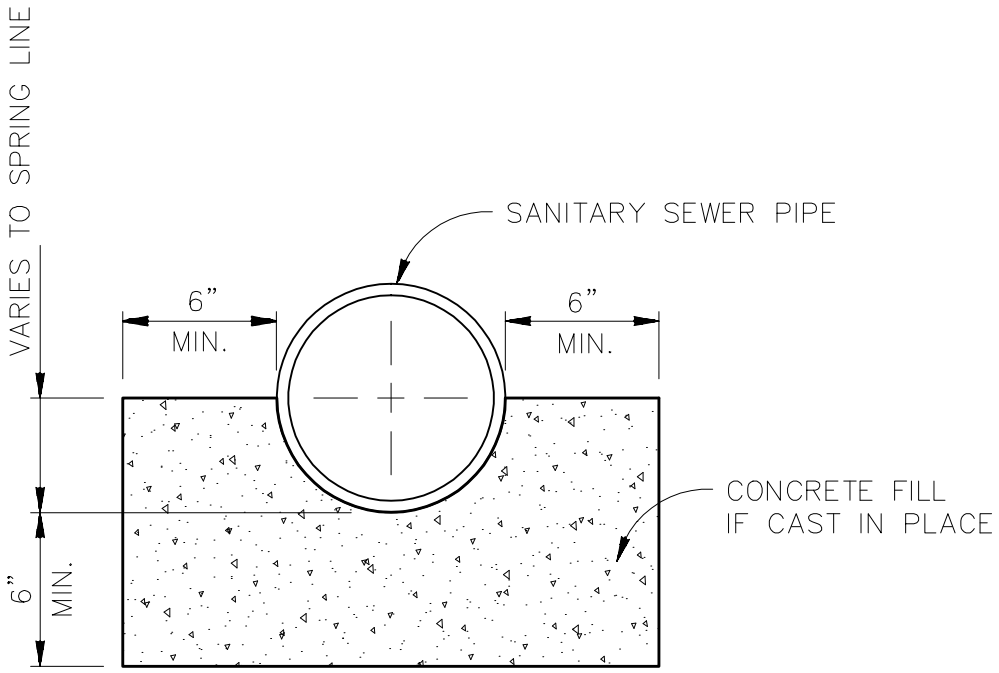

CITY OF BOERNE		
SANITARY SEWER CONCRETE CRADLE		
SCALE: N.T.S.	DRAWING No. 02530-4.1	DATE: JULY 2015

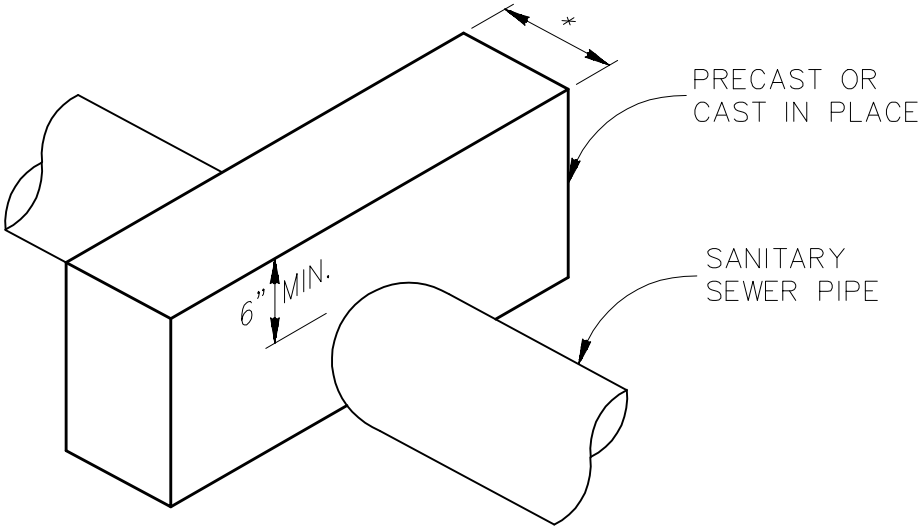

*LENGTH AS SPECIFIED ON DRAWINGS, 12" MIN.

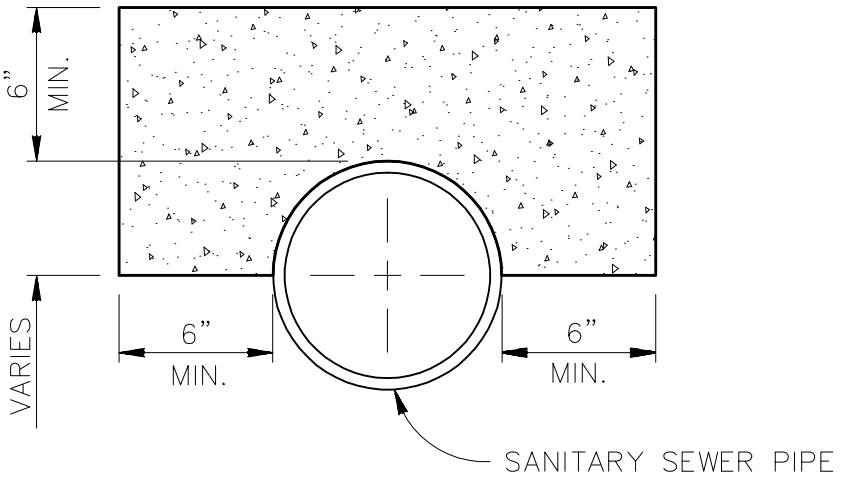

CITY OF BOERNE

SANITARY SEWER CONCRETE SADDLE

SCALE:	DRAWING No.	DATE:
N.T.S.	02530-4.2	JULY 2015

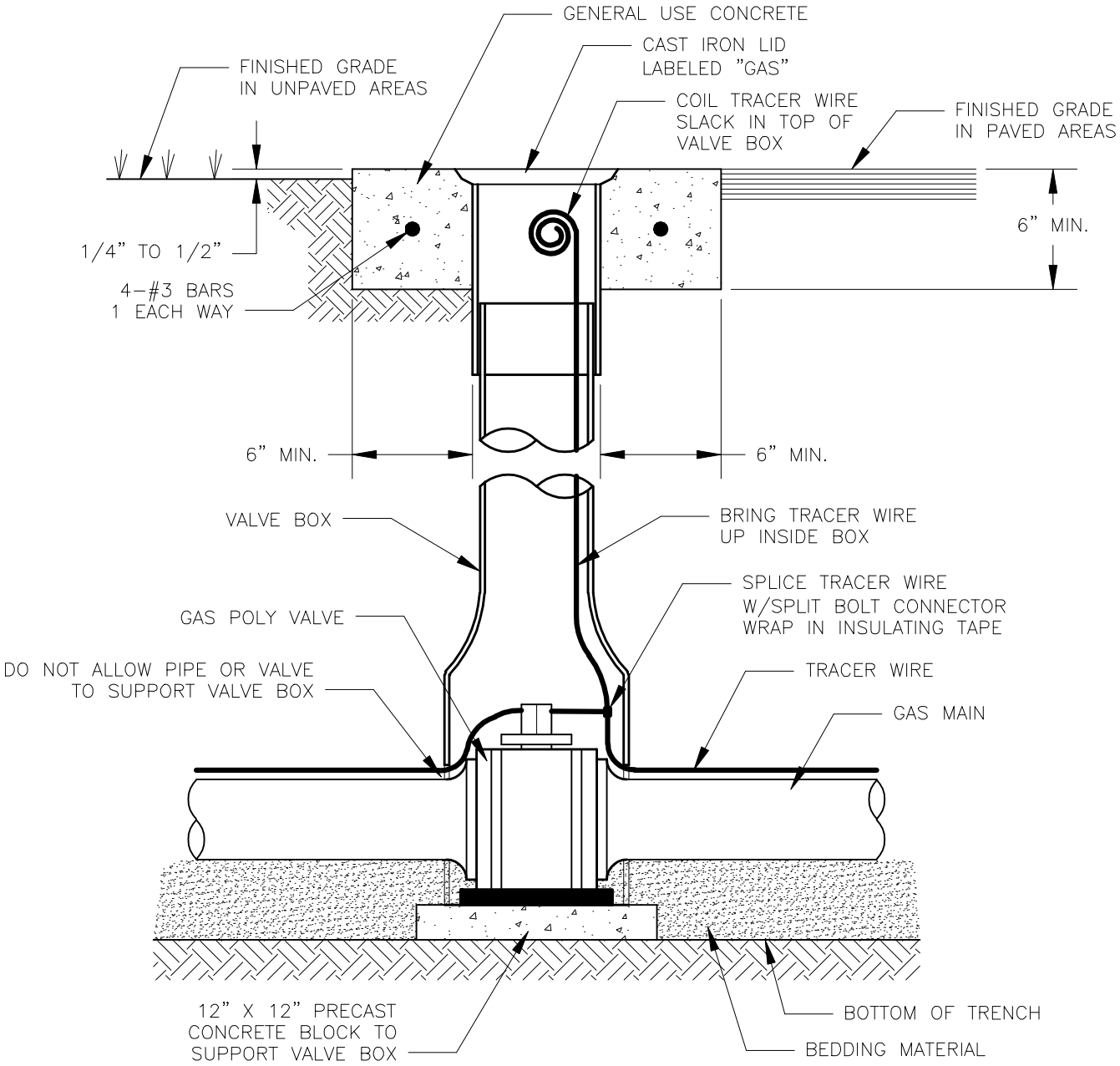

CITY OF BOERNE

GAS VALVE AND VALVE BOX

SCALE:	DRAWING No.	DATE:
N.T.S.	02560-1.0	JULY 2015

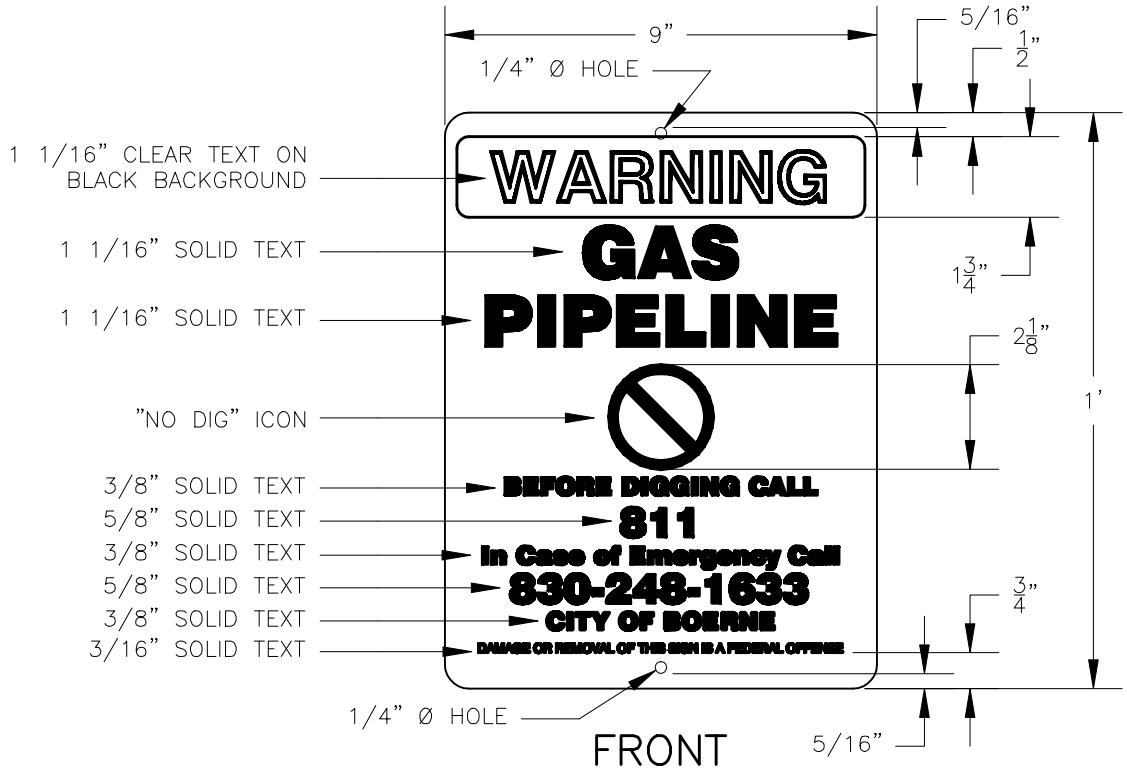

FRONT

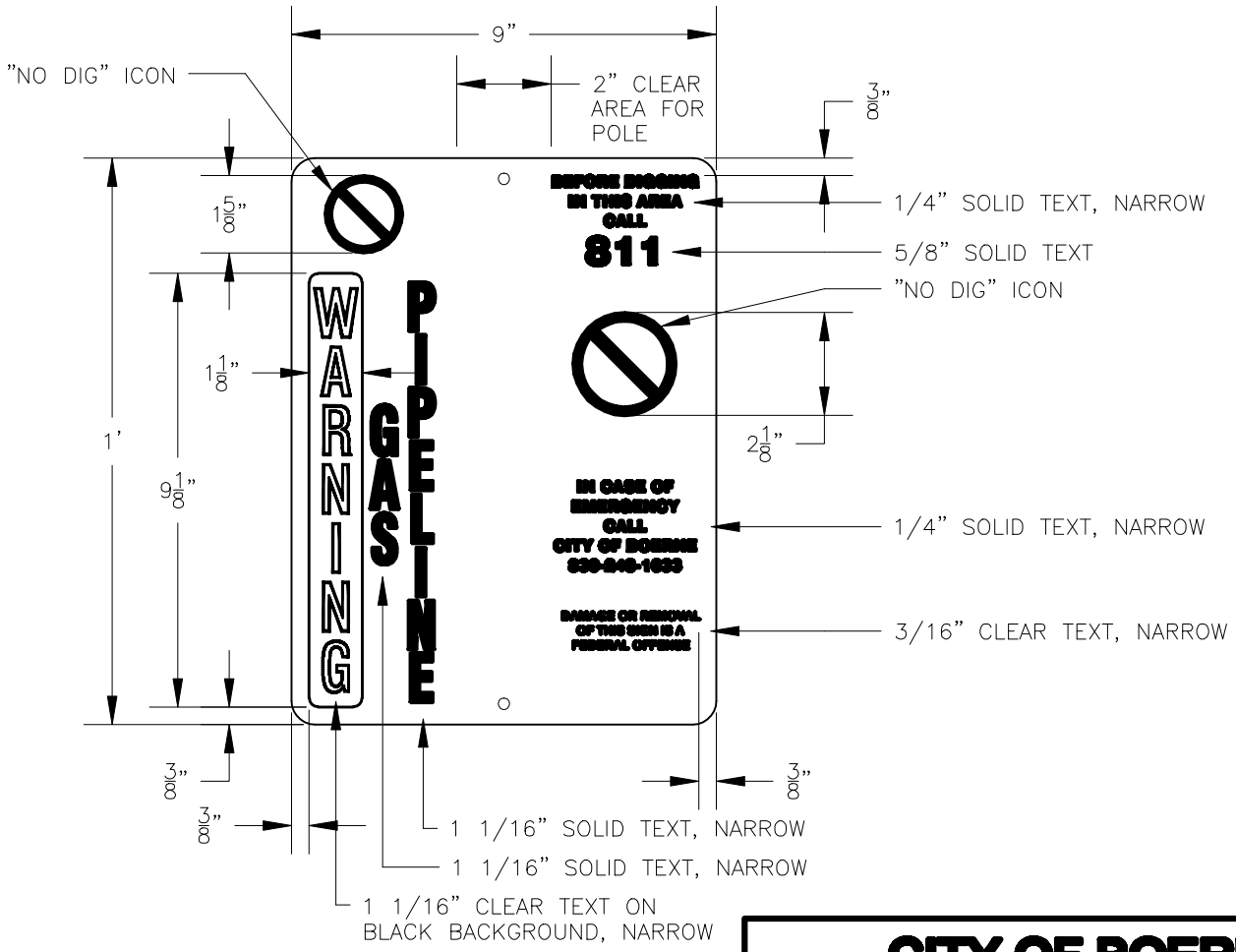

BACK

NOTE: MOUNT SIGN ON STEEL POST, 5'-6" ABOVE FINISHED GRADE.

CITY OF BOERNE		
GAS WARNING SIGN		
SCALE: N.T.S.	DRAWING No. 02560-1.1	DATE: JULY 2015

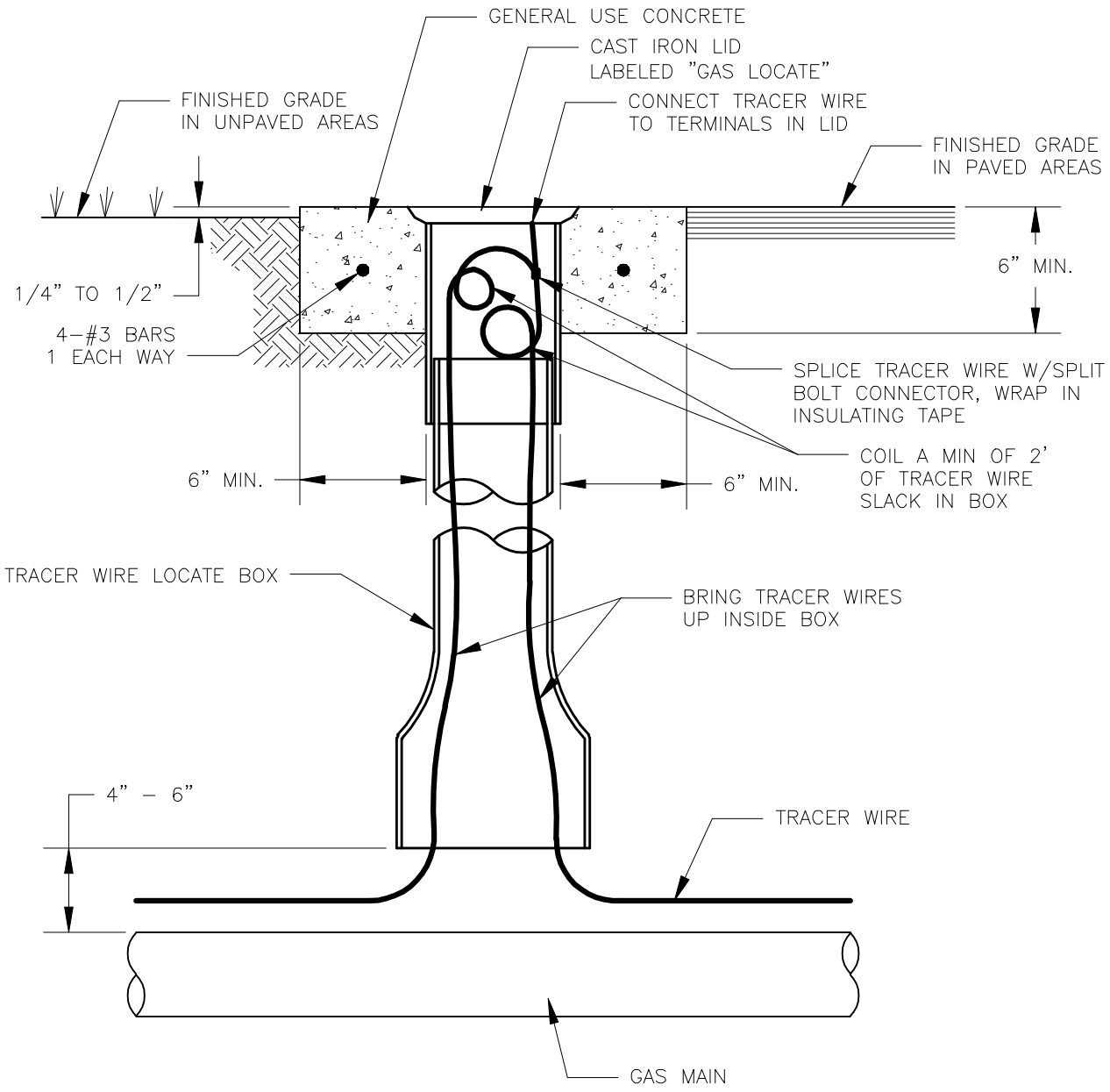

CITY OF BOERNE		
TRACER WIRE LOCATE BOX		
SCALE: N.T.S.	DRAWING No. 02560-1.2	DATE: JULY 2015

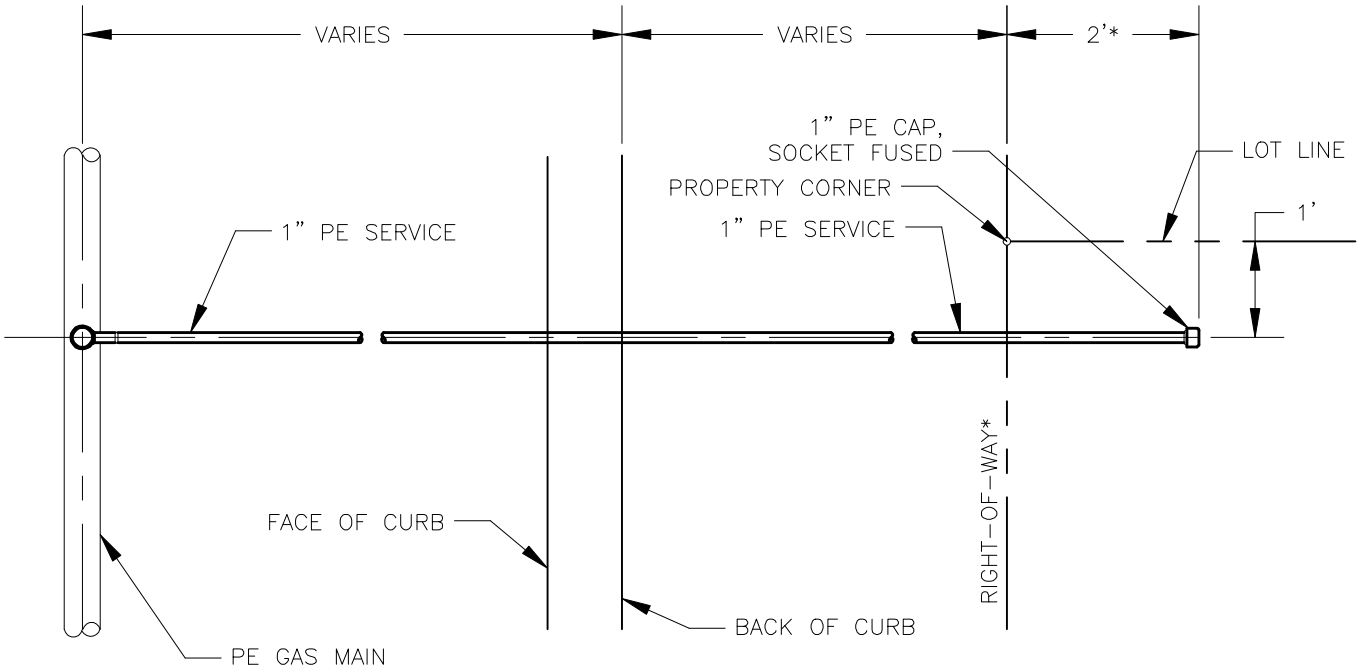

*END SERVICE 2' FROM BUILDING SETBACK WHEN GAS SERVICE TO BUILDING IS MANDATORY, AND 2' FROM RIGHT-OF-WAY OTHERWISE.

PLAN

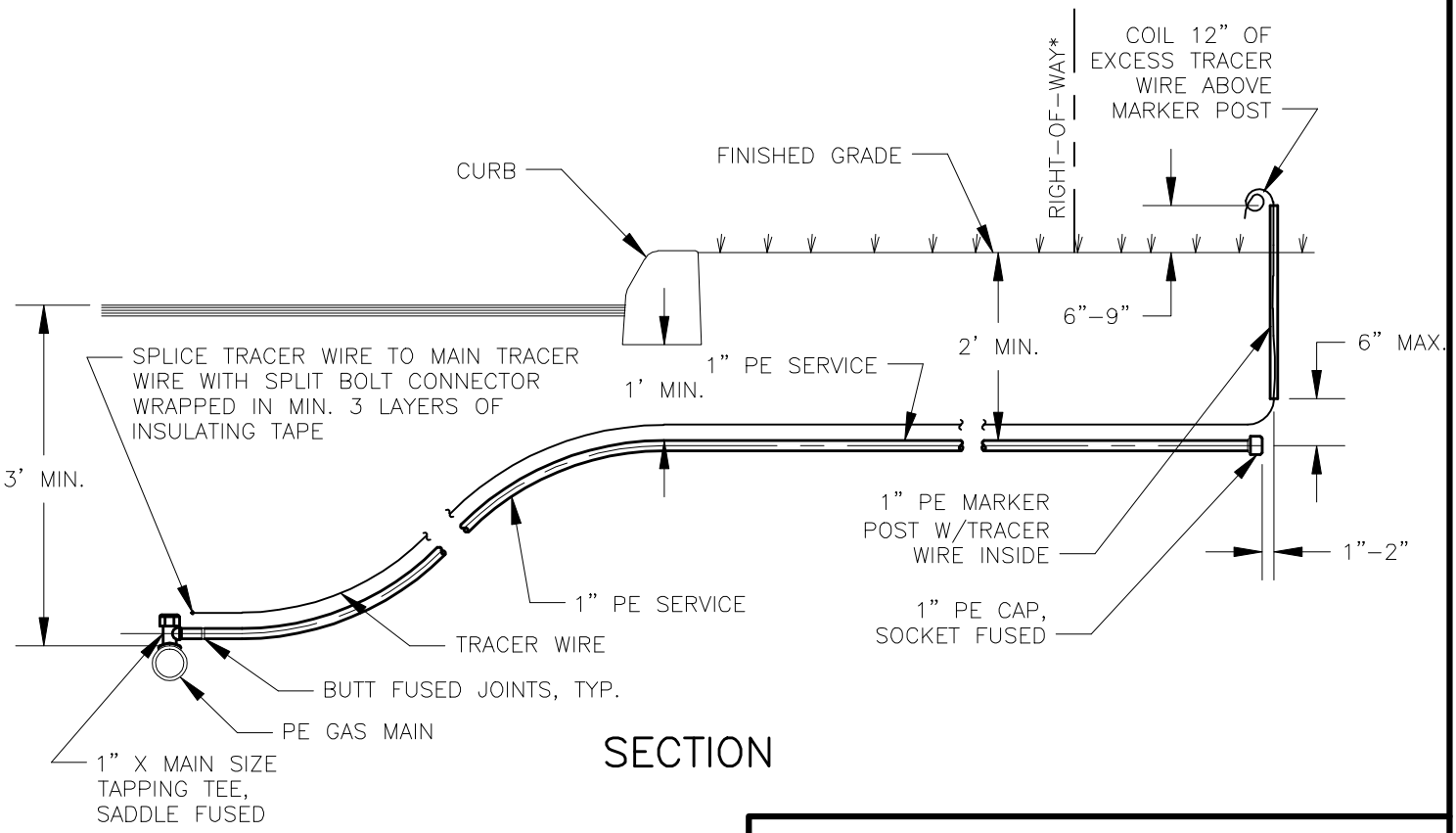

SECTION

CITY OF BOERNE

GAS SERVICE

SCALE:	DRAWING No.	DATE:
N.T.S.	02560-1.3	JULY 2015

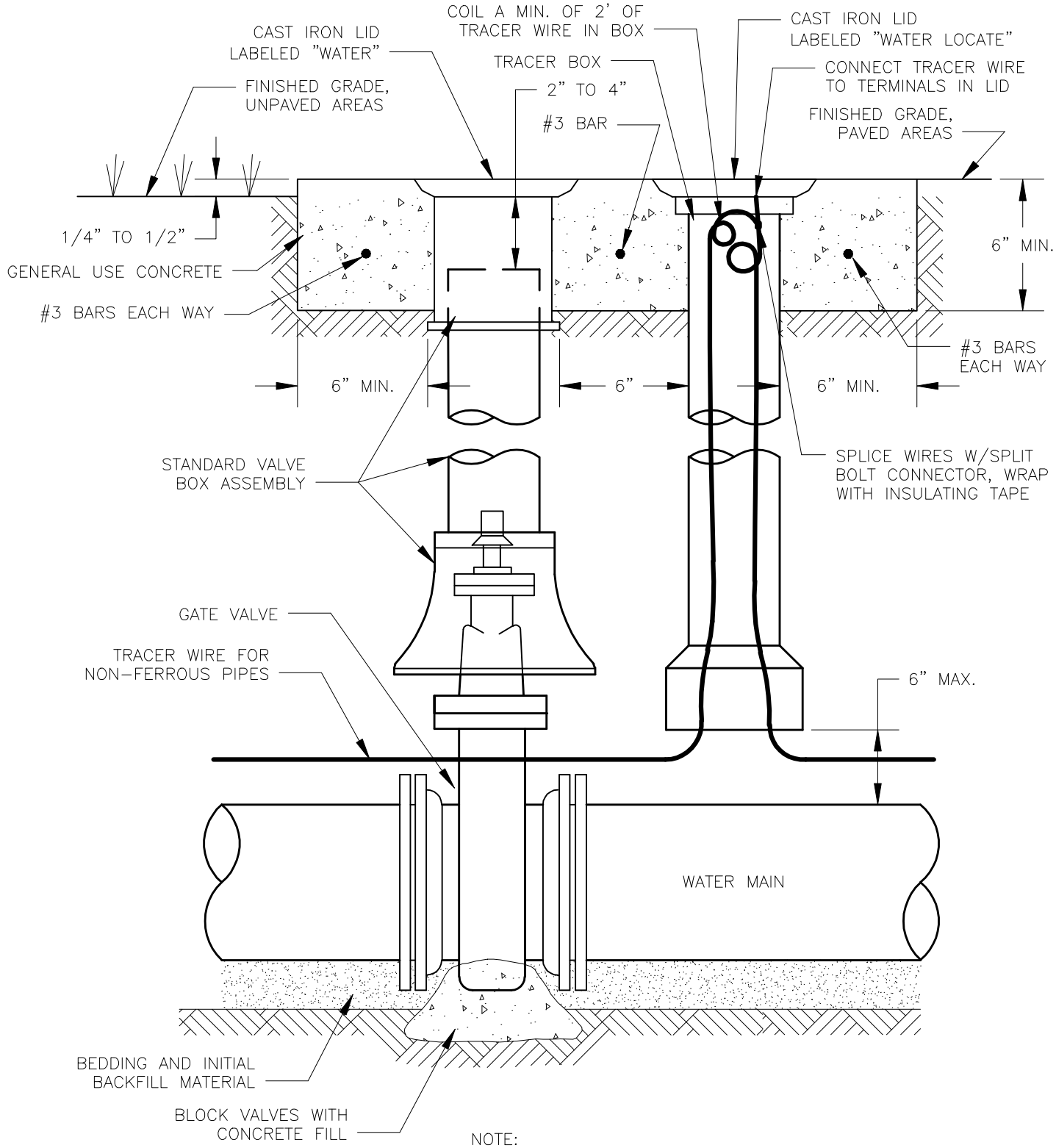

NOTE:
1. ENCASE VALVES IN POLYETHYLENE.
2. PROVIDE STEM EXTENSIONS FOR OPERATING NUT WHEN NUT MORE THAN 4' BELOW FINISHED GRADE.

CITY OF BOERNE

WATER GATE VALVE AND VALVE BOX

SCALE:	DRAWING No.	DATE:
N.T.S.	02660-1.0	JULY 2015

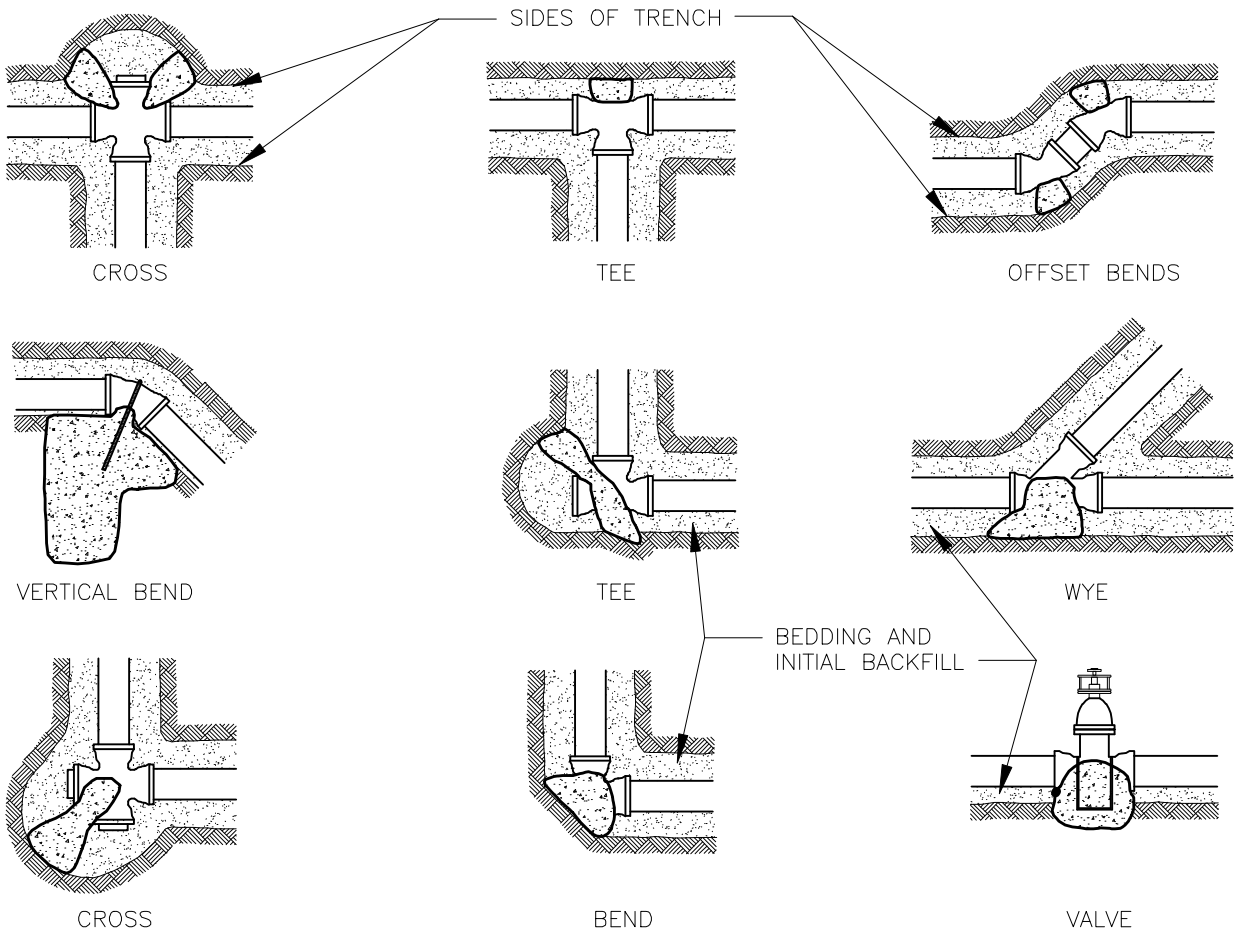

BLOCKING AREA IN SQUARE FEET IN ROCK WALL TRENCH

SIZE PIPE	TEES & DEAD ENDS	90° BENDS	45° BENDS	22 1/2° BENDS
6"	2	2	1	1
8"	3	4	2	1
12"	6	9	5	2
16"	11	15	8	4

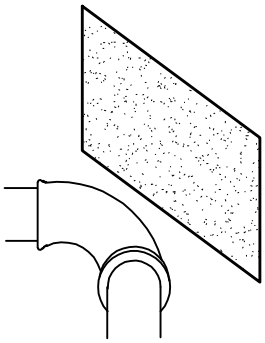

BLOCKING AREA IN SQUARE FEET IN OTHER THAN ROCK WALL TRENCH

SIZE PIPE	TEES & DEAD ENDS	90° BENDS	45° BENDS	22 1/2° BENDS
6"	3	4	2	1
8"	4	6	4	2
12"	10	14	8	4
16"	18	25	14	7

BLOCKING AREA FOR 200 PSI TEST AND 175 PSI WORKING PRESSURES.

THRUST BLOCKING SHALL BE CONCRETE FILL.

CITY OF BOERNE

CONCRETE THRUST BLOCKING

SCALE:	DRAWING No.	DATE:
N.T.S.	02660-1.1	JULY 2015

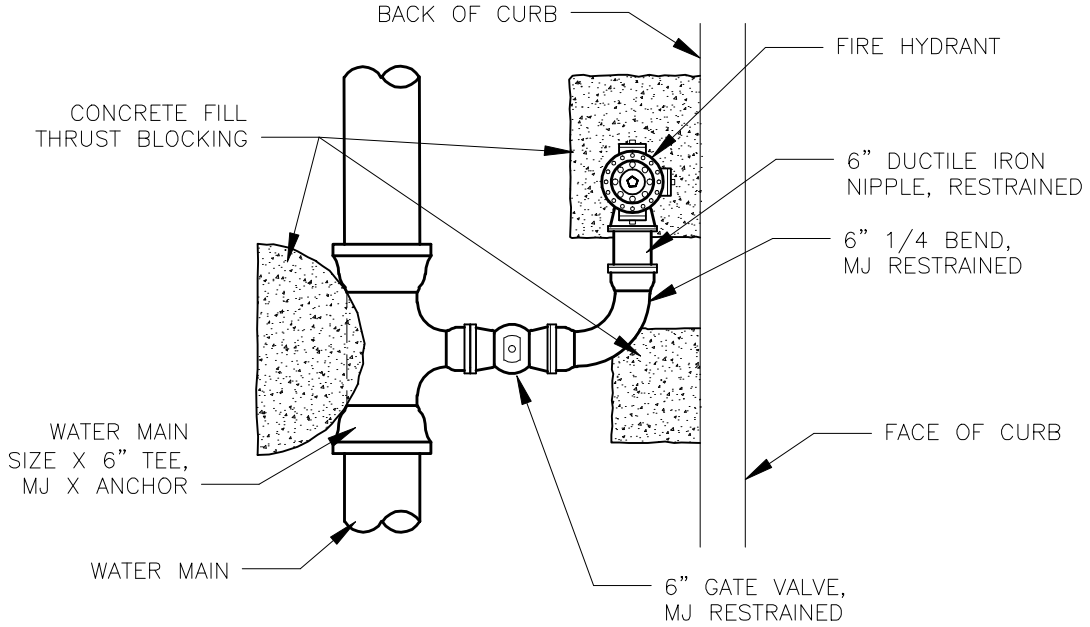

PLAN

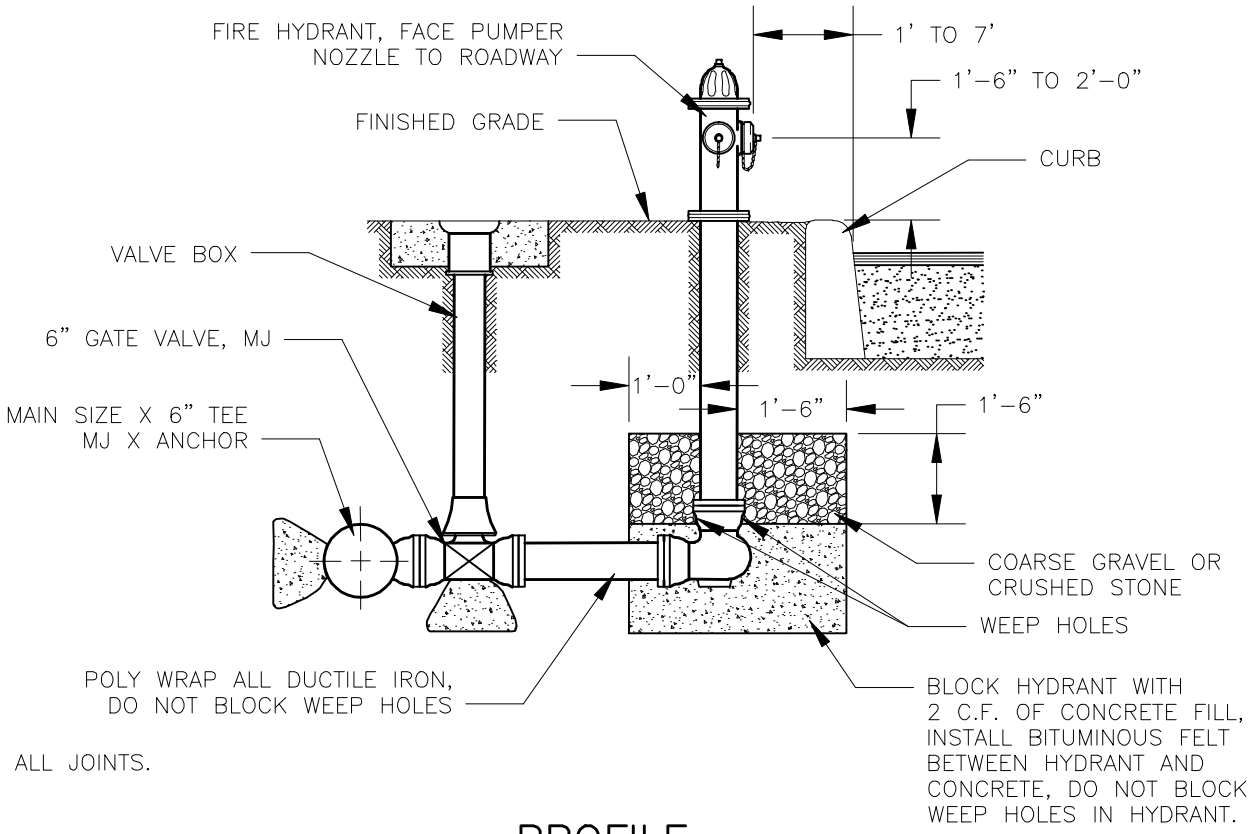

NOTE:
RESTRAIN ALL JOINTS.

PROFILE
(BEND NOT SHOWN)

CITY OF BOERNE

FIRE HYDRANT ASSEMBLY

SCALE:	DRAWING No.	DATE:
N.T.S.	02660-2.0	JULY 2015

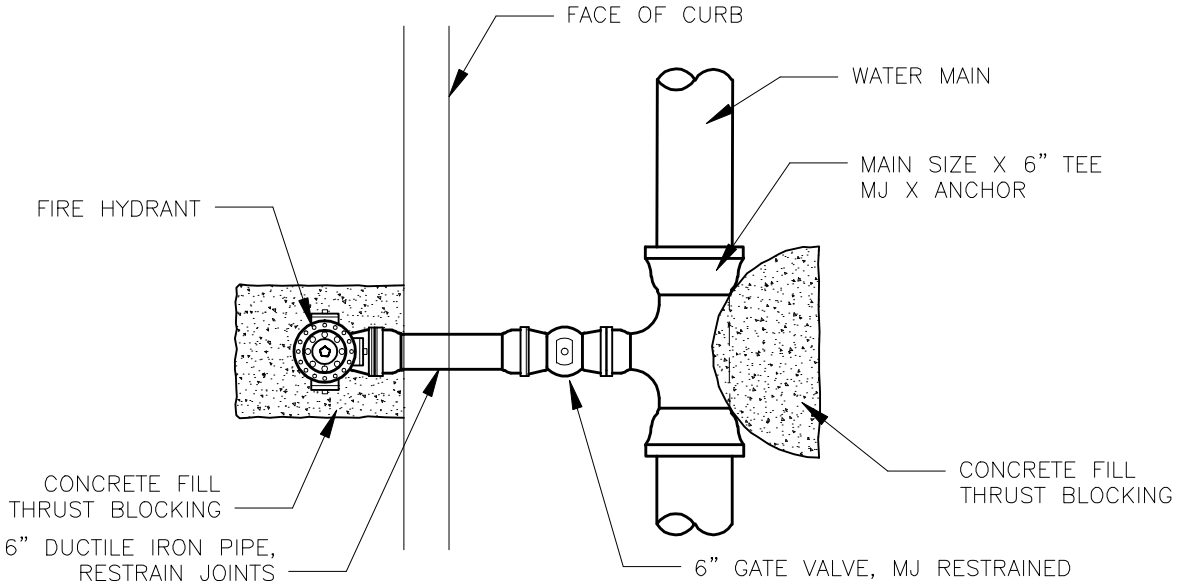

PLAN

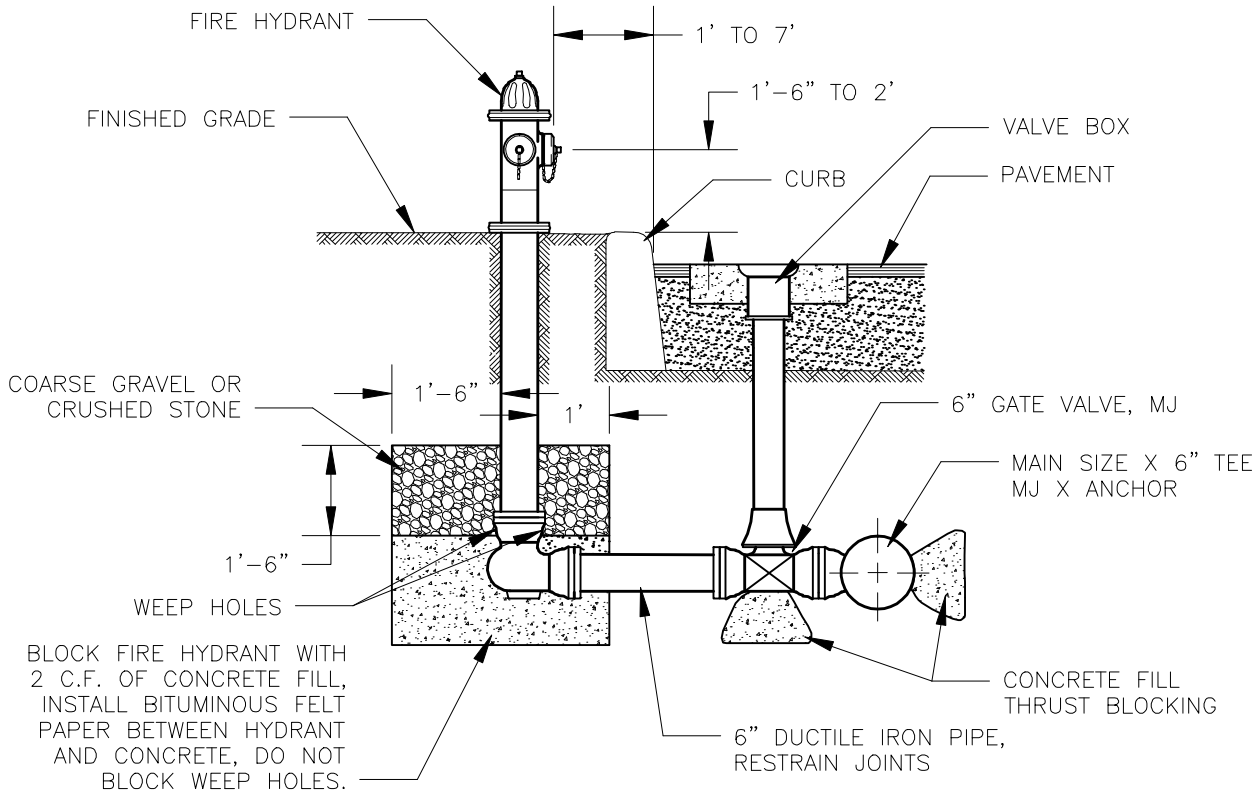

PROFILE

NOTES:

1. PRIOR APPROVAL OF THE CITY OF BOERNE REQUIRED TO USE THIS DETAIL.

2. POLY WRAP ALL DUCTILE IRON BELOW GRADE.

3. RESTRAIN ALL JOINTS.

CITY OF BOERNE

FIRE HYDRANT
ALTERNATE INSTALLATION

SCALE:	DRAWING No.	DATE:
N.T.S	02660-2.1	JULY 2015

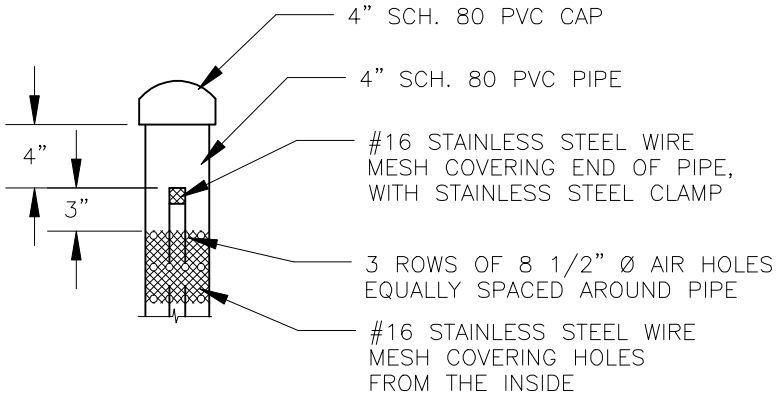

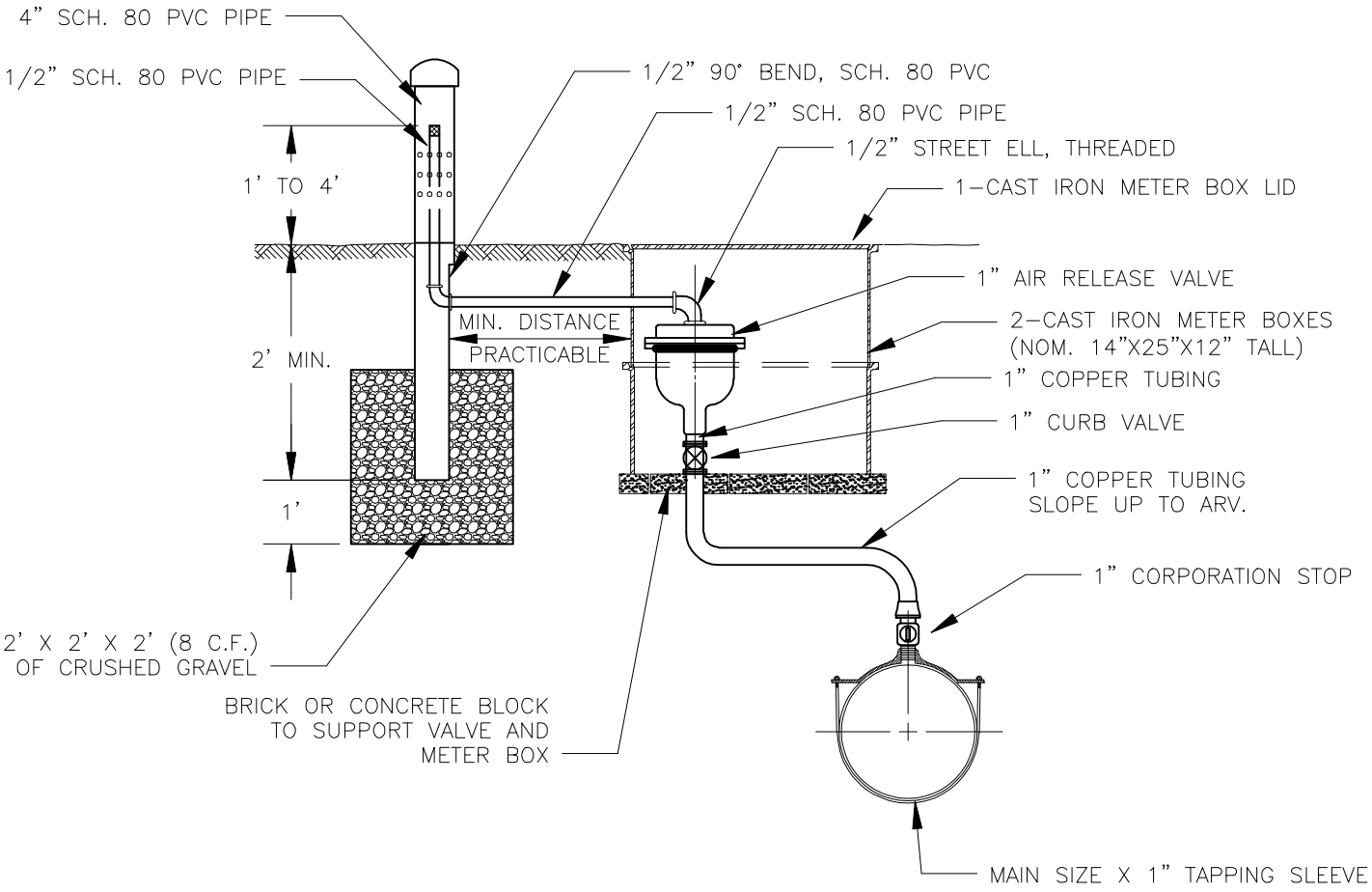

CITY OF BOERNE

1 IN AIR RELEASE VALVE FOR WATER MAINS

SCALE:	DRAWING No.	DATE:
N.T.S.	02660-3.0	JULY 2015

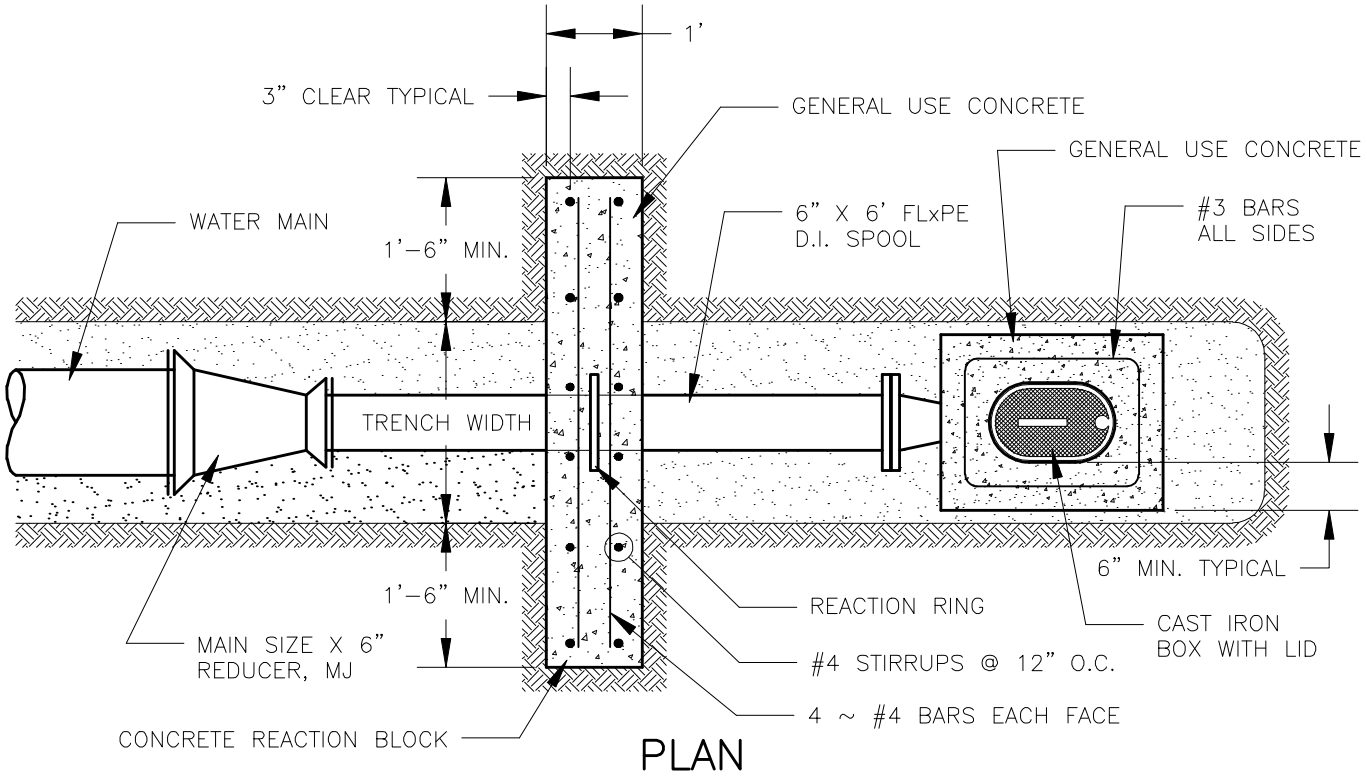

PLAN

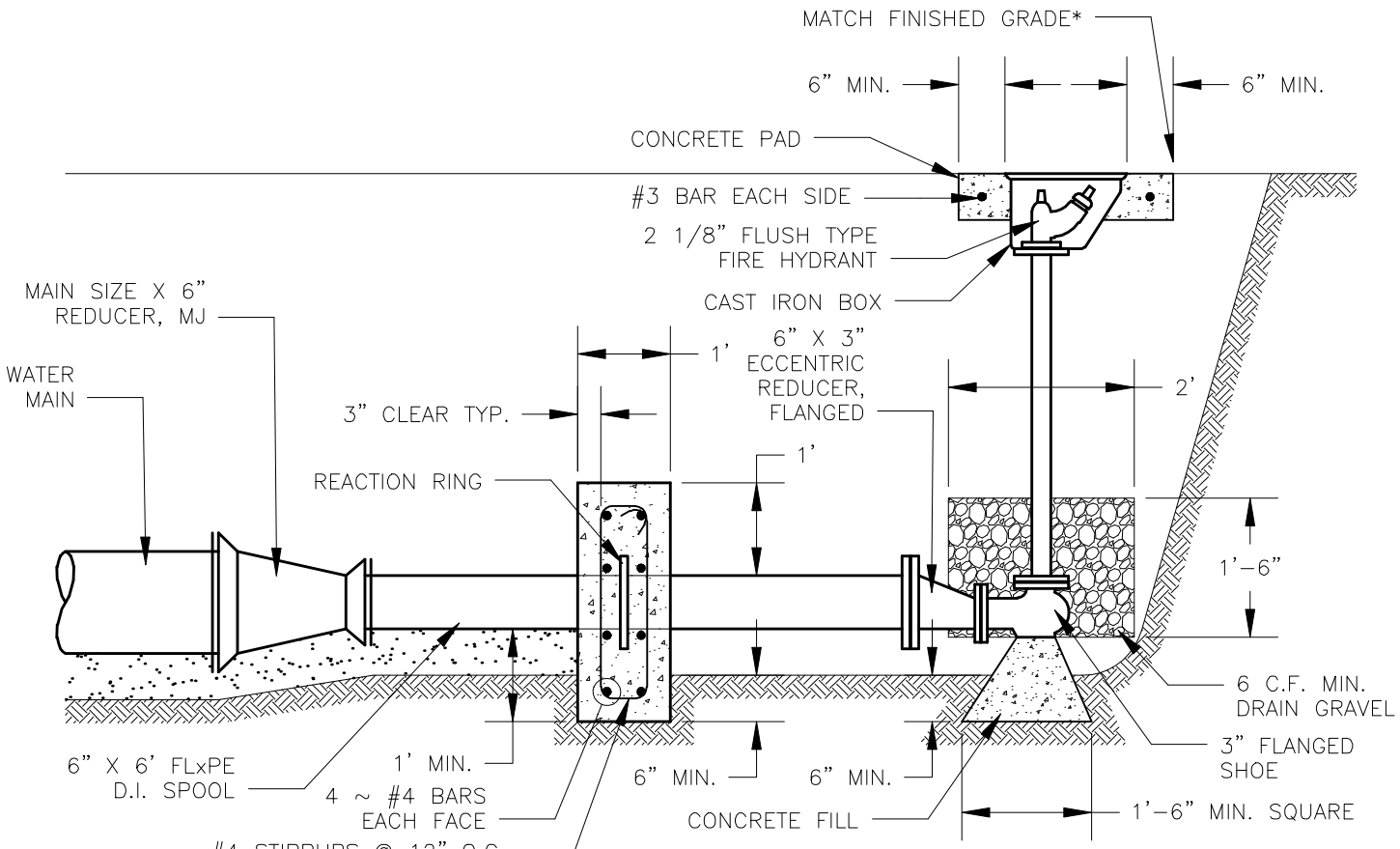

SECTION

*MATCH FLUSH IN PAVED AREAS. SET BOX AND CONCRETE 1" ±1/2" ABOVE FINISHED GRADE IN UNPAVED AREAS.

CITY OF BOERNE

END OF WATER MAIN BLOWOFF

SCALE:	DRAWING No.	DATE:
N.T.S.	02660-3.1	JULY 2015

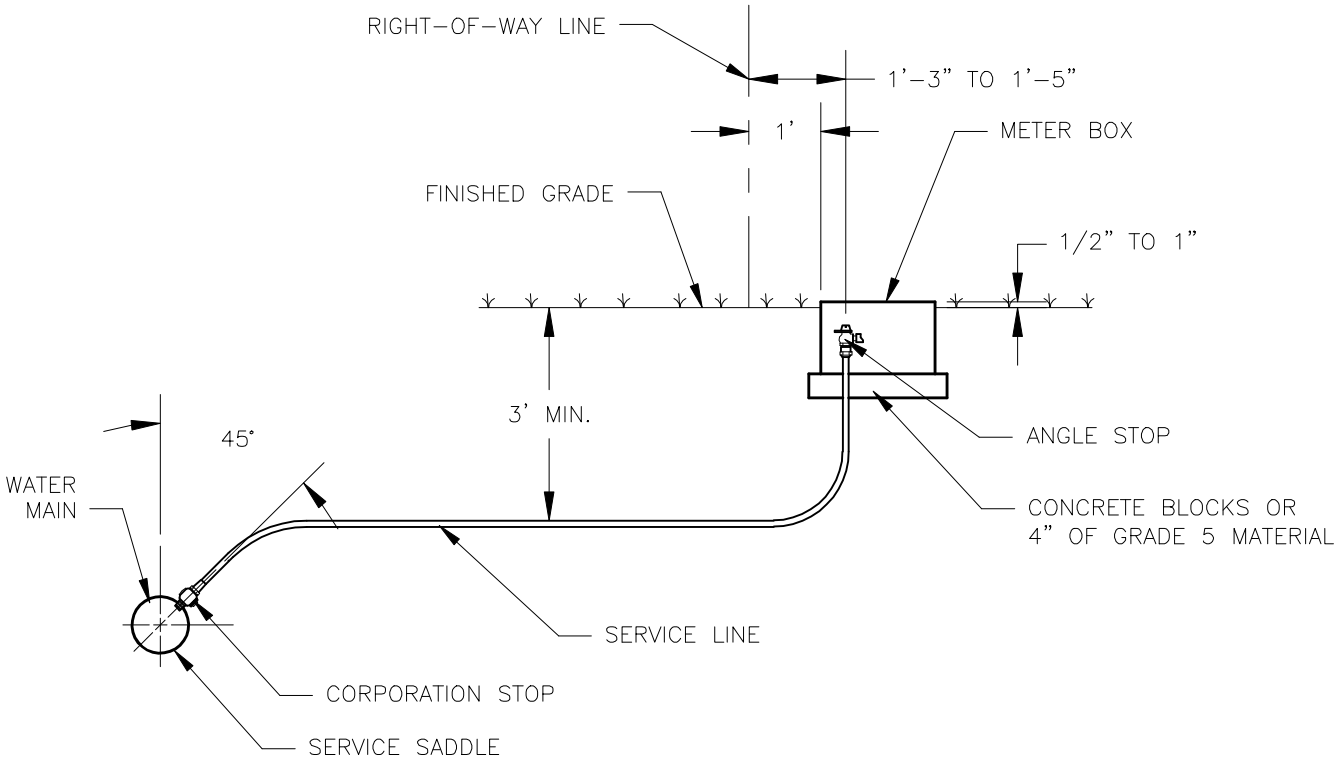

PROFILE

CITY OF BOERNE		
3/4 TO 2 IN SINGLE WATER SERVICE		
SCALE: N.T.S.	DRAWING No. 02660-4.0	DATE: JULY 2015

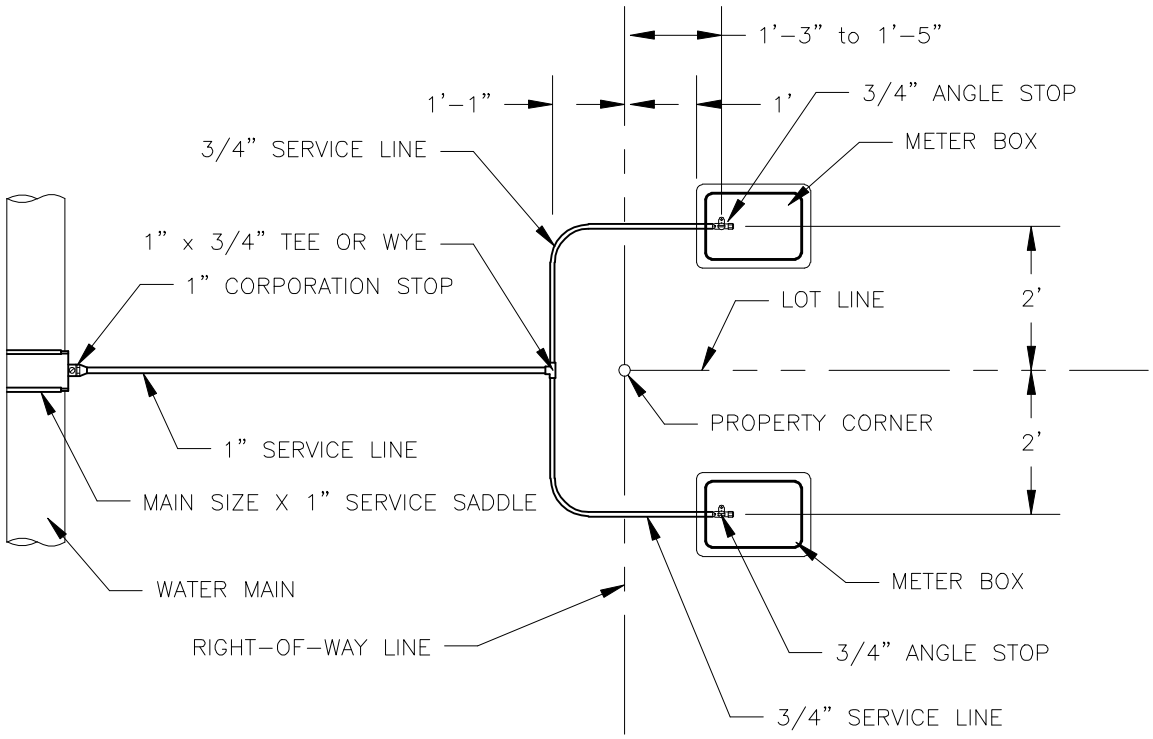

PLAN

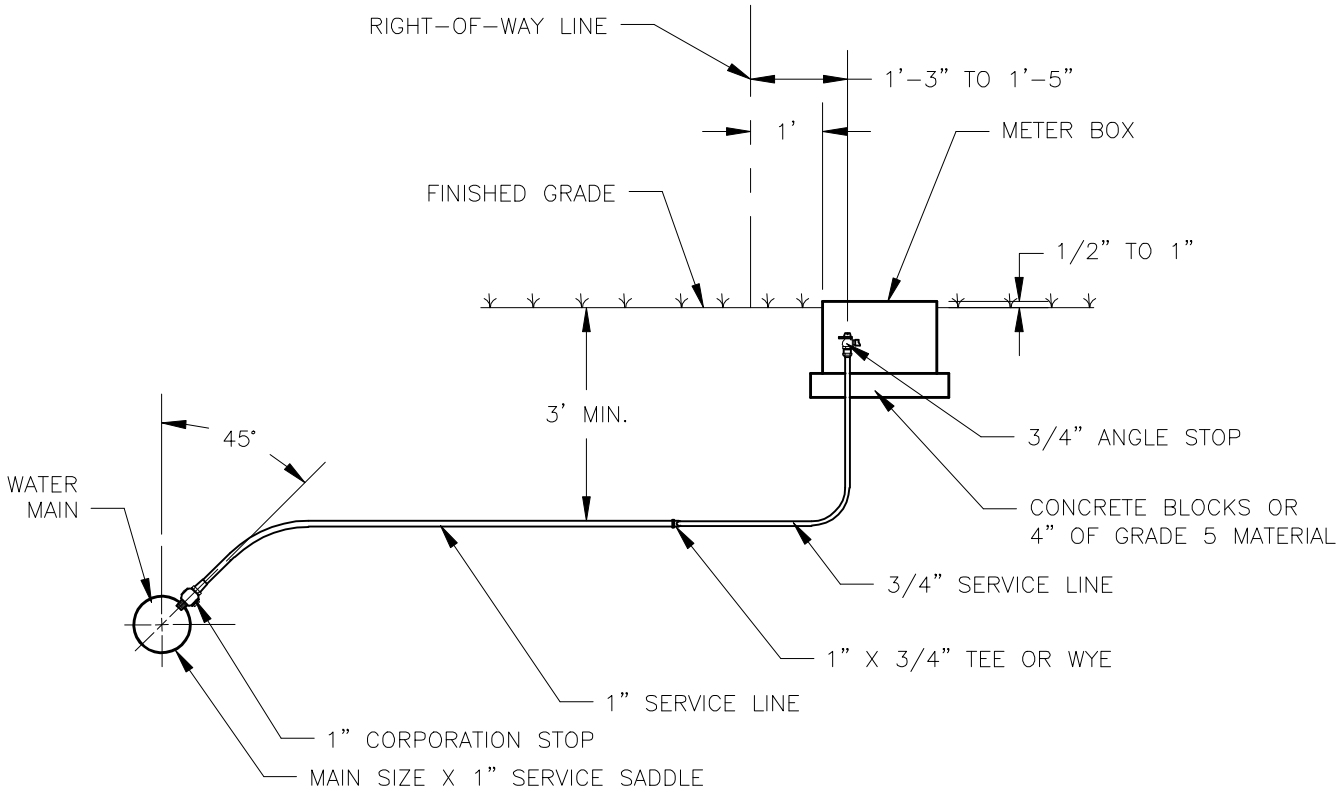

PROFILE

CITY OF BOERNE		
DUAL 3/4 IN WATER SERVICES		
SCALE: N.T.S.	DRAWING No. 02660-4.1	DATE: JULY 2015

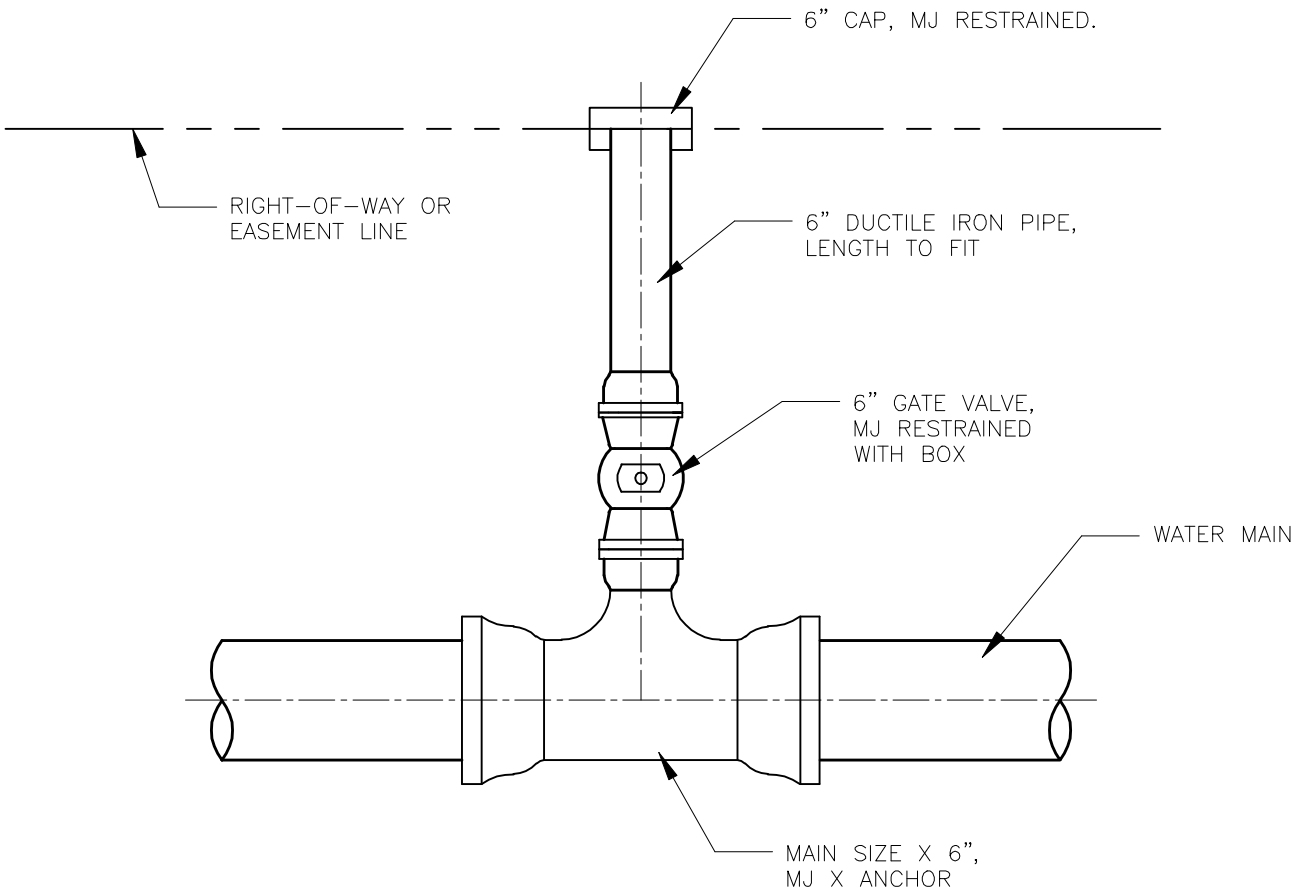

NOTE:
CUSTOMER'S BACKFLOW PREVENTION DEVICE MUST BE LOCATED WITHIN 40 FEET OF WATER MAIN AND INCLUDE A DETECTOR METER. REGISTER ALL BACKFLOW PREVENTERS WITH THE CITY OF BOERNE PUBLIC WORKS DEPARTMENT

CITY OF BOERNE		
6 IN FIRE SERVICE		
SCALE: N.T.S.	DRAWING No. 02660-4.2	DATE: JULY 2015

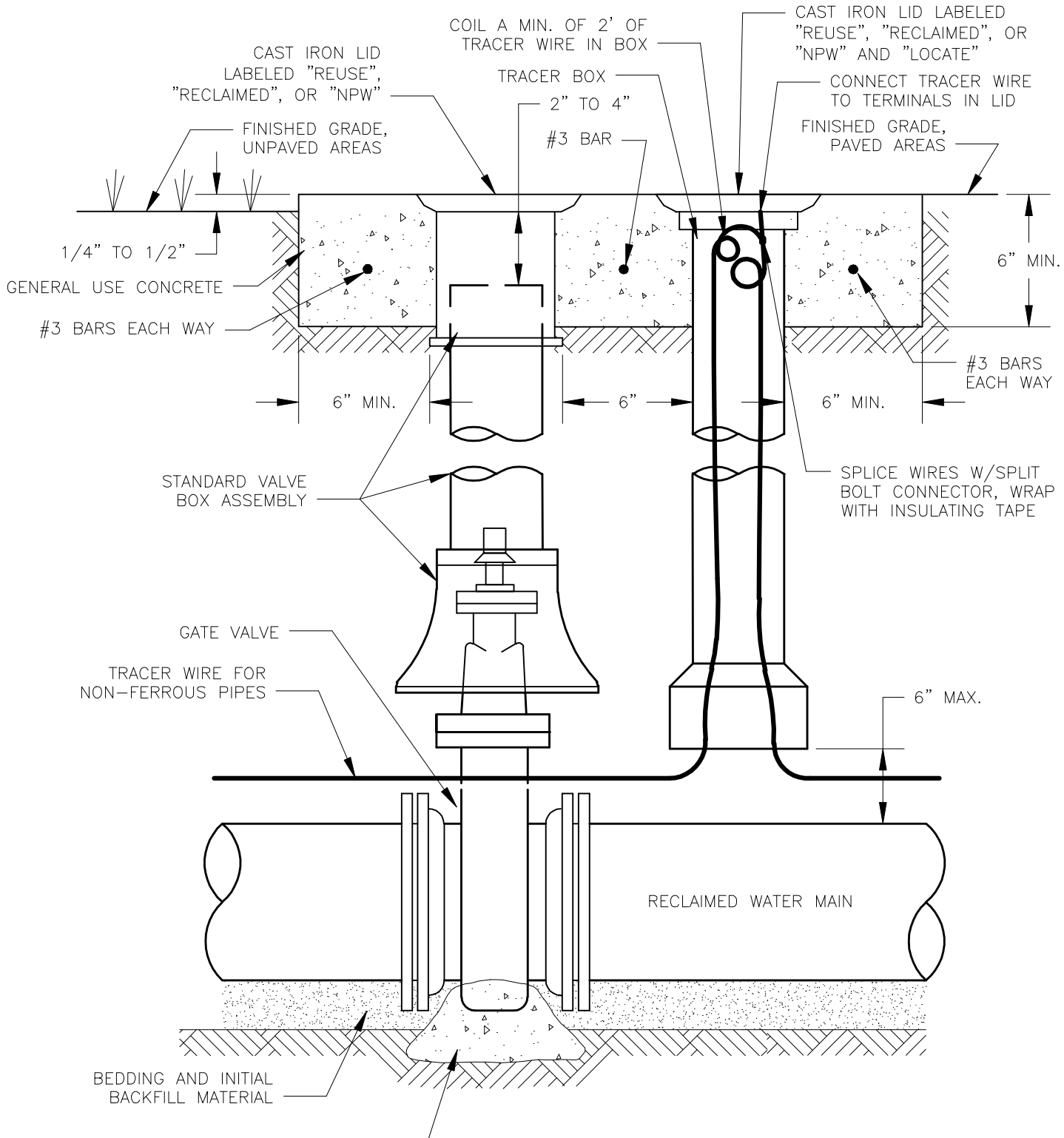

NOTE:
1. ENCASE VALVES IN PURPLE POLYETHYLENE.
2. PROVIDE STEM EXTENSIONS FOR OPERATING NUT WHEN NUT MORE THAN 4' BELOW FINISHED GRADE.

CITY OF BOERNE

RECLAIMED WATER GATE VALVE AND VALVE BOX

SCALE:	DRAWING No.	DATE:
N.T.S.	02670-1.0	JULY 2015

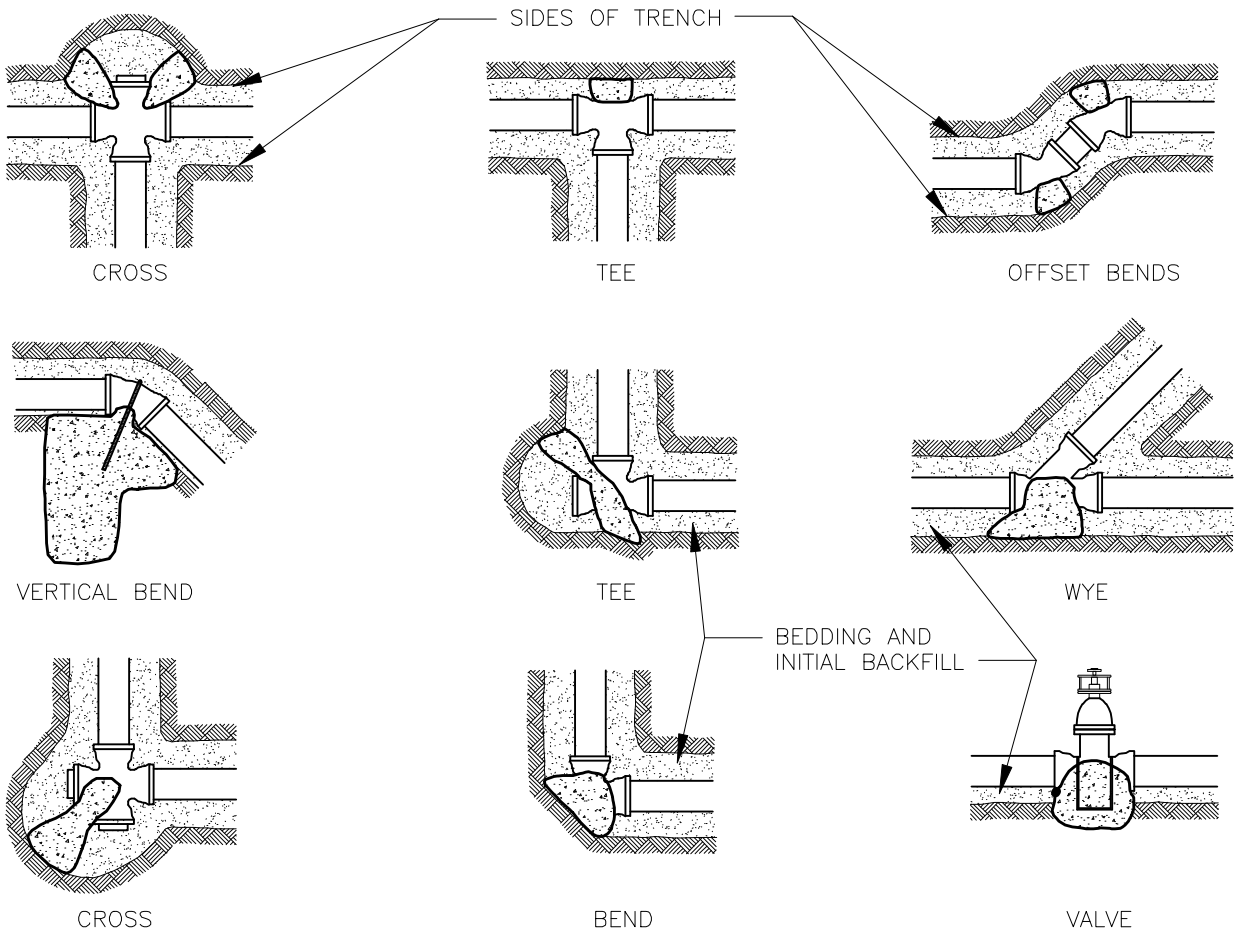

BLOCKING AREA IN SQUARE FEET IN ROCK WALL TRENCH

SIZE PIPE	TEES & DEAD ENDS	90° BENDS	45° BENDS	22 1/2° BENDS
6"	2	2	1	1
8"	3	4	2	1
12"	6	9	5	2
16"	11	15	8	4

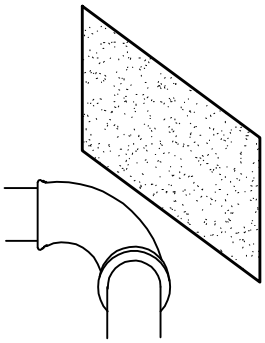

BLOCKING AREA IN SQUARE FEET IN OTHER THAN ROCK WALL TRENCH

SIZE PIPE	TEES & DEAD ENDS	90° BENDS	45° BENDS	22 1/2° BENDS
6"	3	4	2	1
8"	4	6	4	2
12"	10	14	8	4
16"	18	25	14	7

BLOCKING AREA FOR 200 PSI TEST AND 175 PSI WORKING PRESSURES.

THRUST BLOCKING SHALL BE CONCRETE FILL.

CITY OF BOERNE

CONCRETE THRUST BLOCKING

SCALE:	DRAWING No.	DATE:
N.T.S.	02670-1.1	JULY 2015

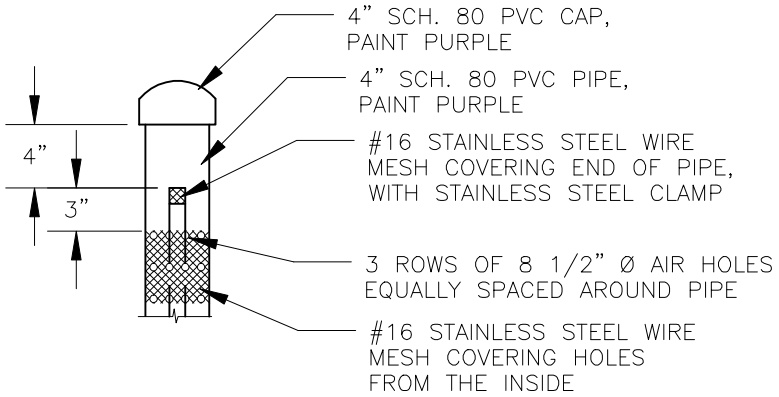

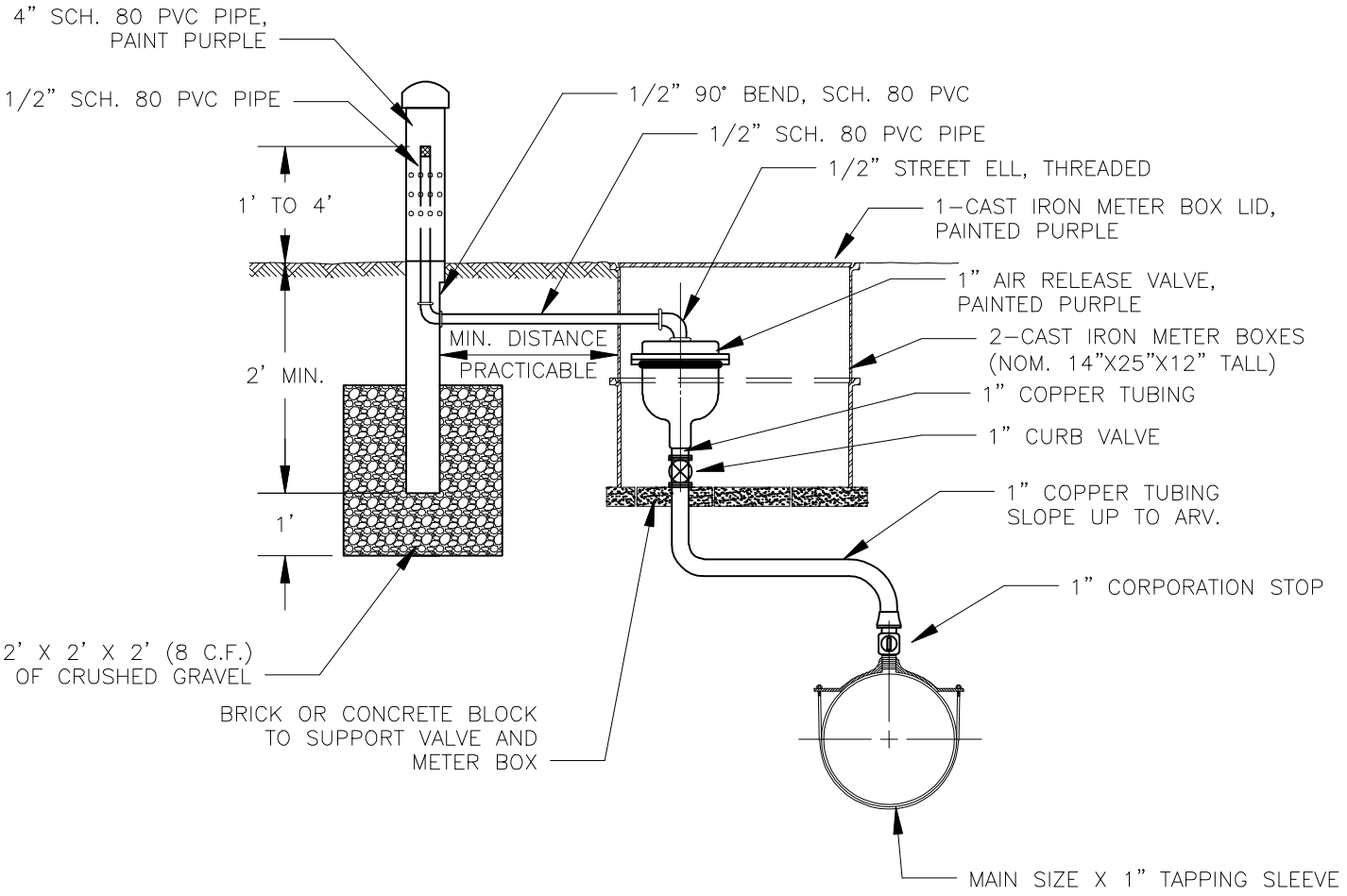

CITY OF BOERNE

1 IN AIR RELEASE VALVE FOR RECLAIMED WATER MAINS

SCALE:	DRAWING No.	DATE:
N.T.S.	02670-2.0	JULY 2015

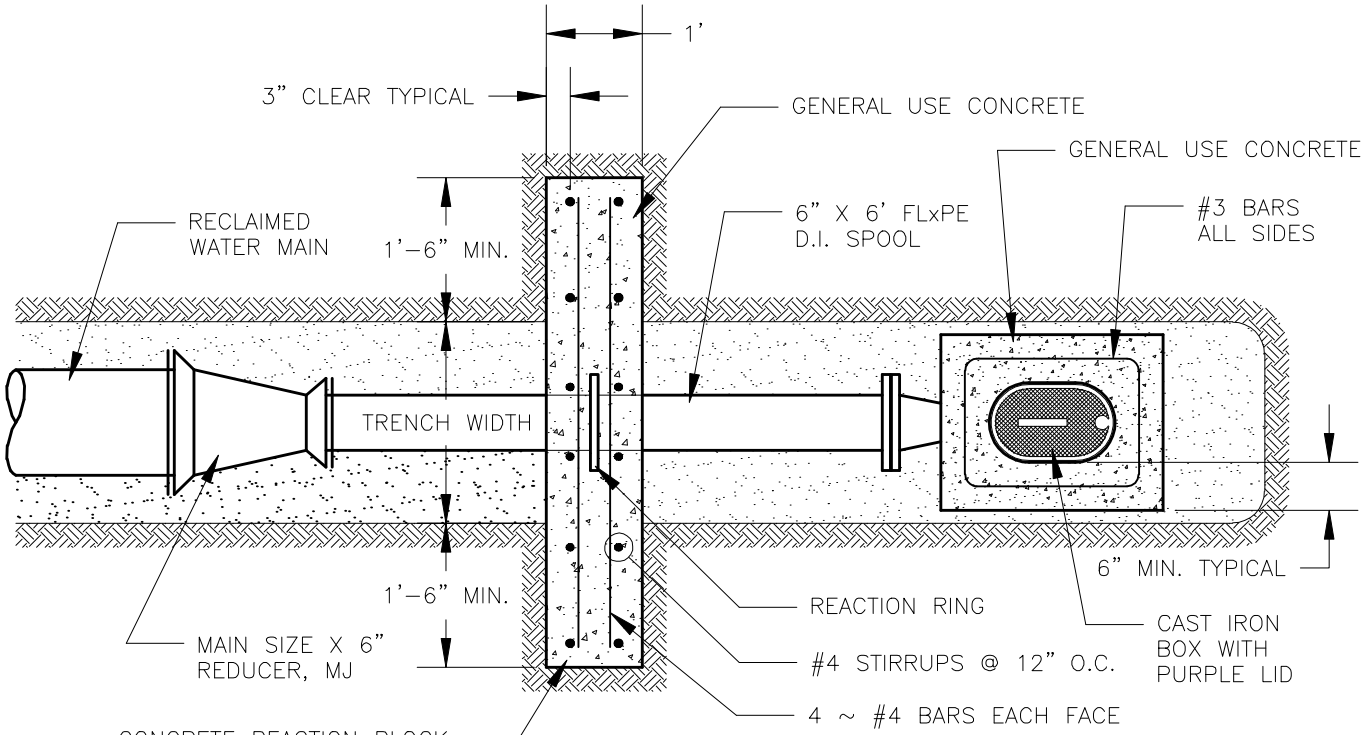

PLAN

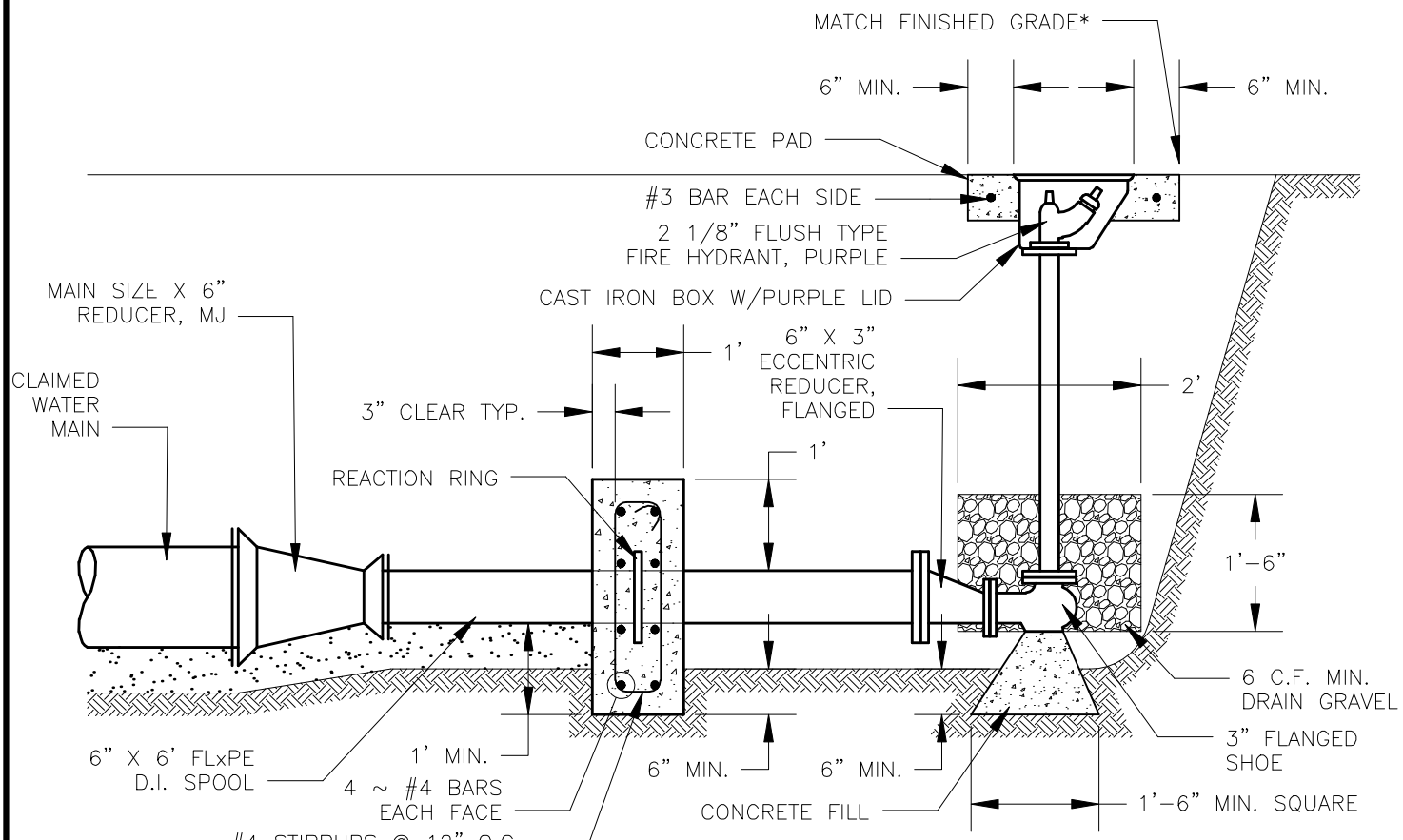

SECTION

*MATCH FLUSH IN PAVED AREAS. SET BOX AND CONCRETE 1" ±1/2" ABOVE FINISHED GRADE IN UNPAVED AREAS.

CITY OF BOERNE

END OF RECLAIMED WATER MAIN BLOWOFF

SCALE:	DRAWING No.	DATE:
N.T.S.	02670-2.1	JULY 2015

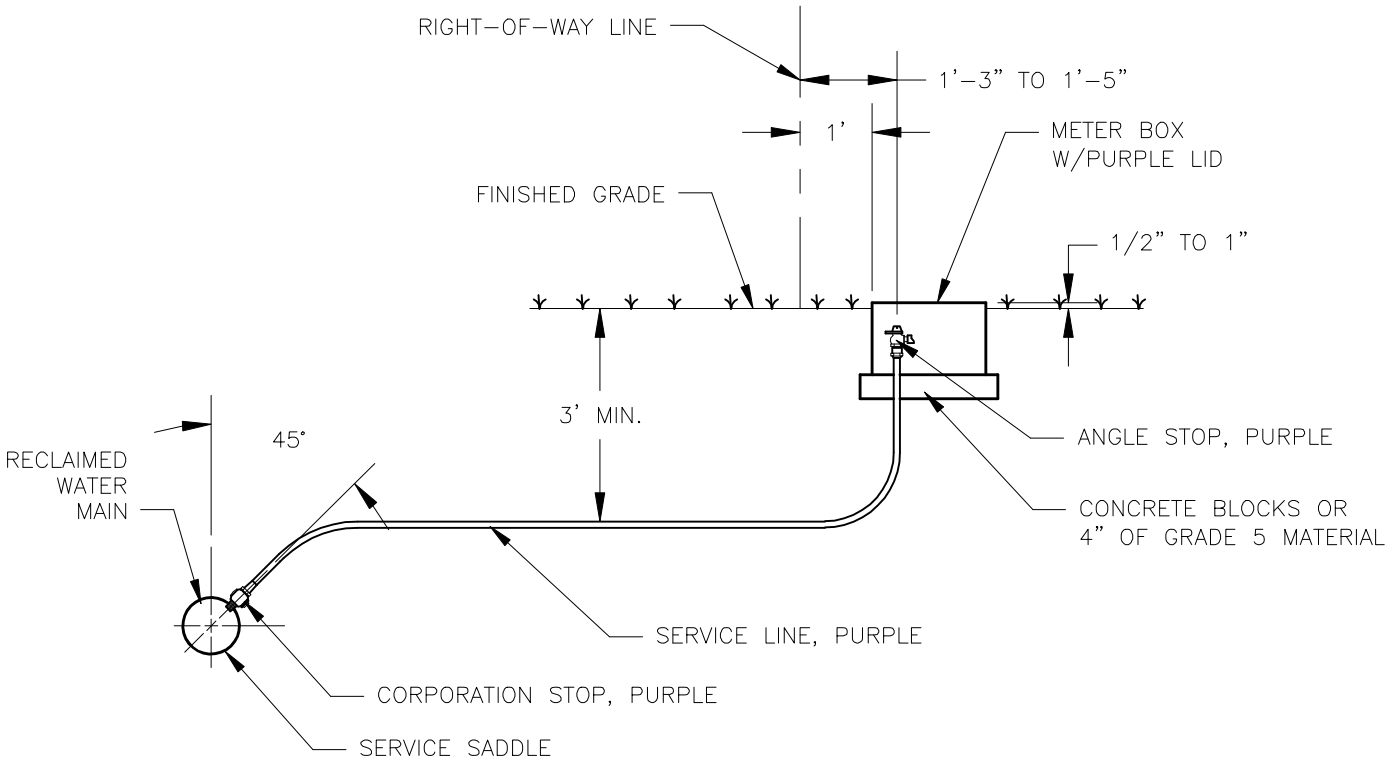

PROFILE

CITY OF BOERNE		
3/4 TO 2 IN SINGLE RECLAIMED WATER SERVICE		
SCALE: N.T.S.	DRAWING No. 02670-3.0	DATE: JULY 2015

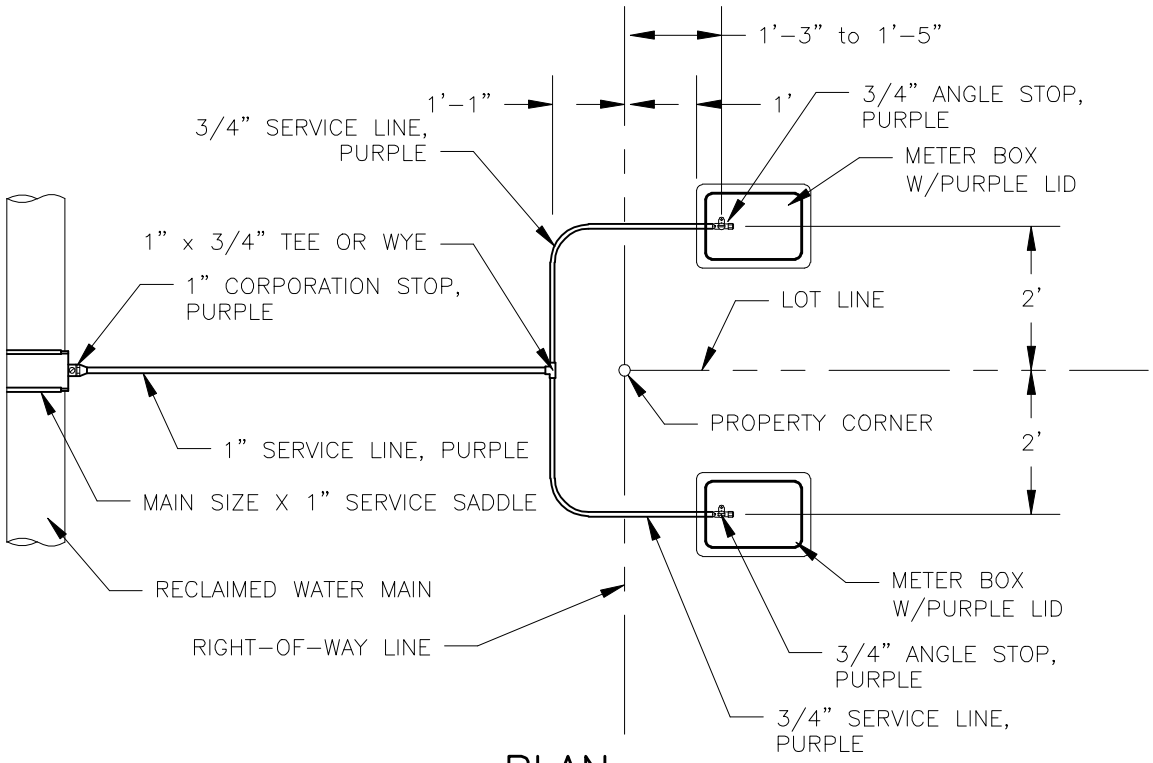

PLAN

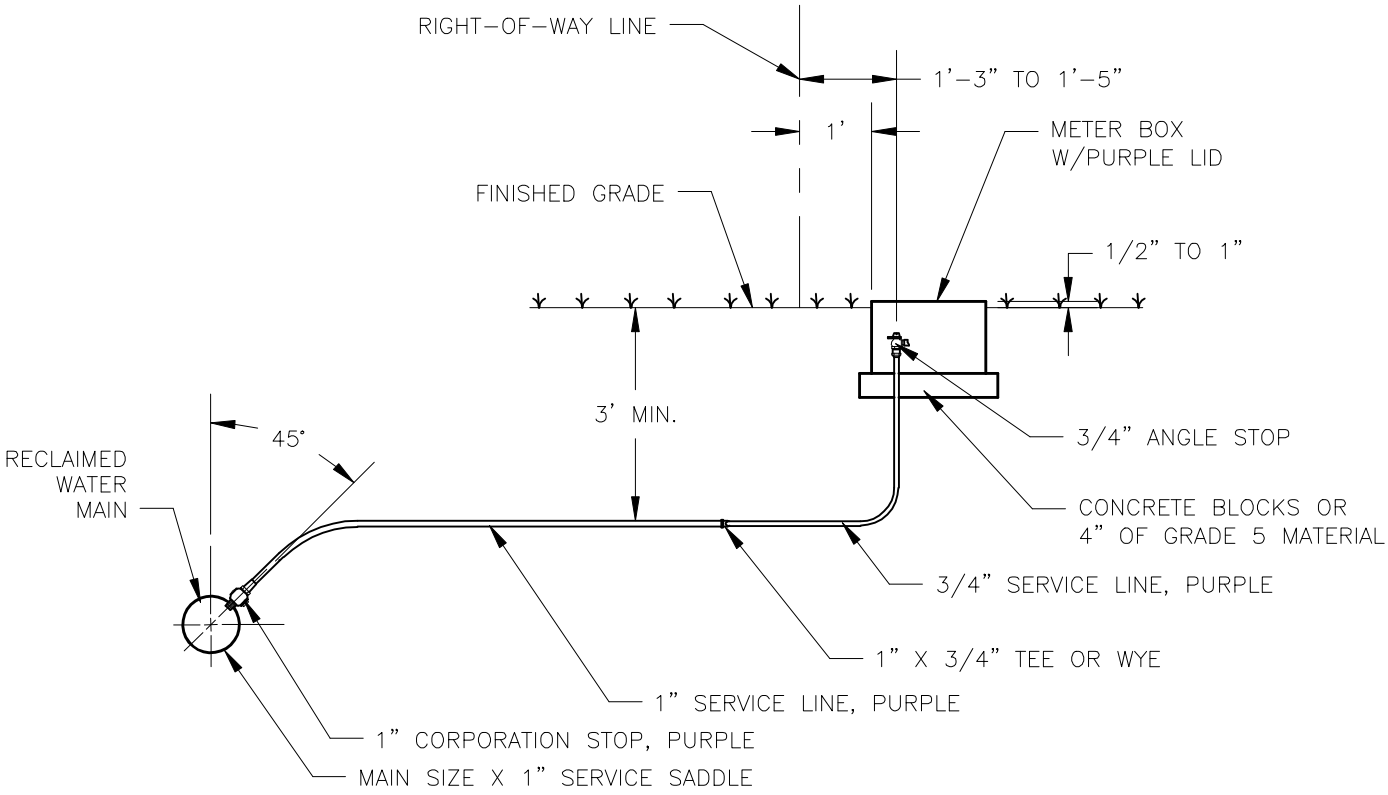

PROFILE

CITY OF BOERNE

DUAL 3/4 IN RECLAIMED WATER SERVICES

SCALE:	DRAWING No.	DATE:
N.T.S.	02670-3.1	JULY 2015

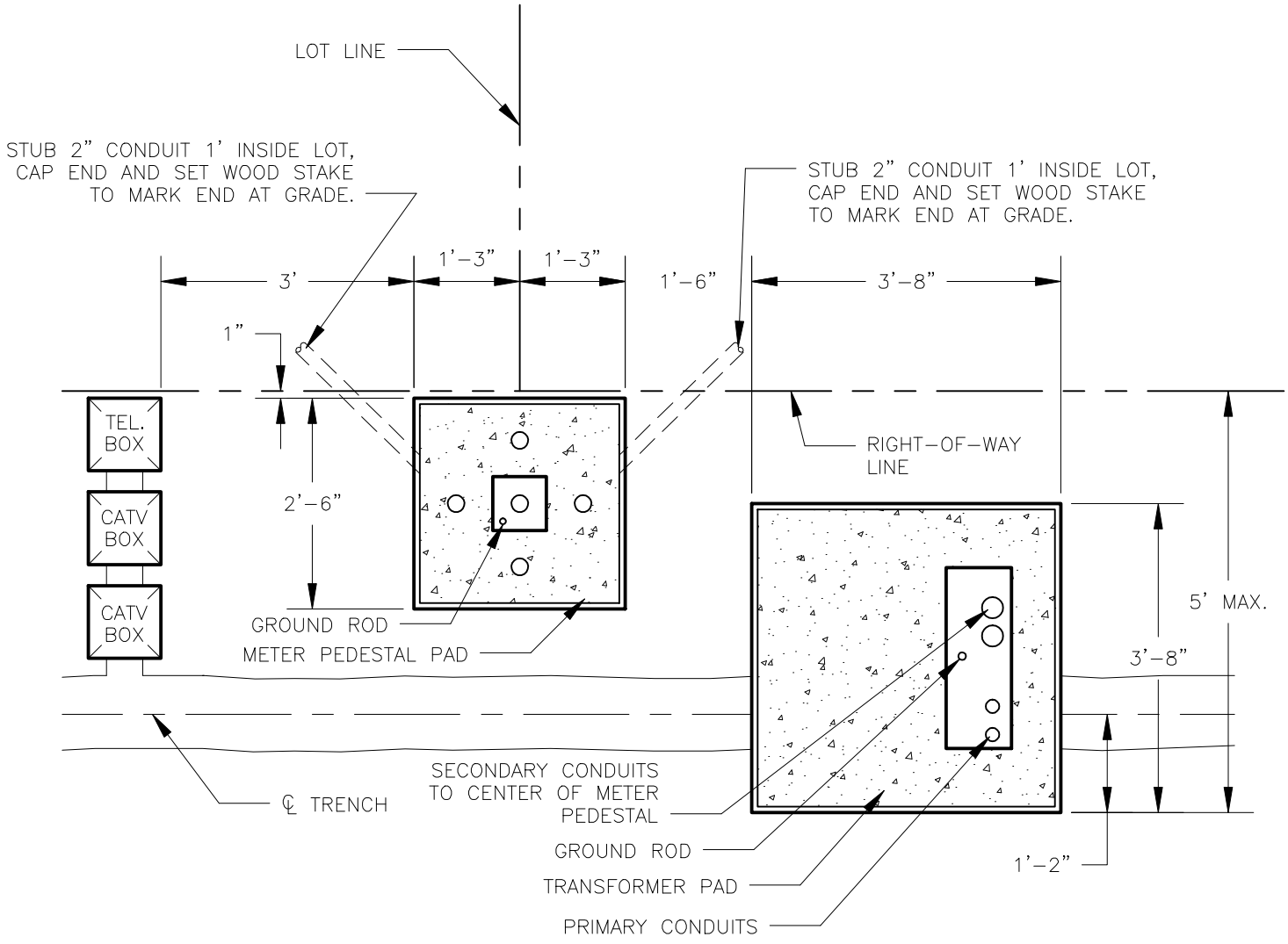

CITY OF BOERNE

ELECTRIC PAD LAYOUT IN ROW FOR UNDERGROUND DISTRIBUTION

SCALE:	DRAWING No.	DATE:
N.T.S.	16100-1.0	JULY 2015

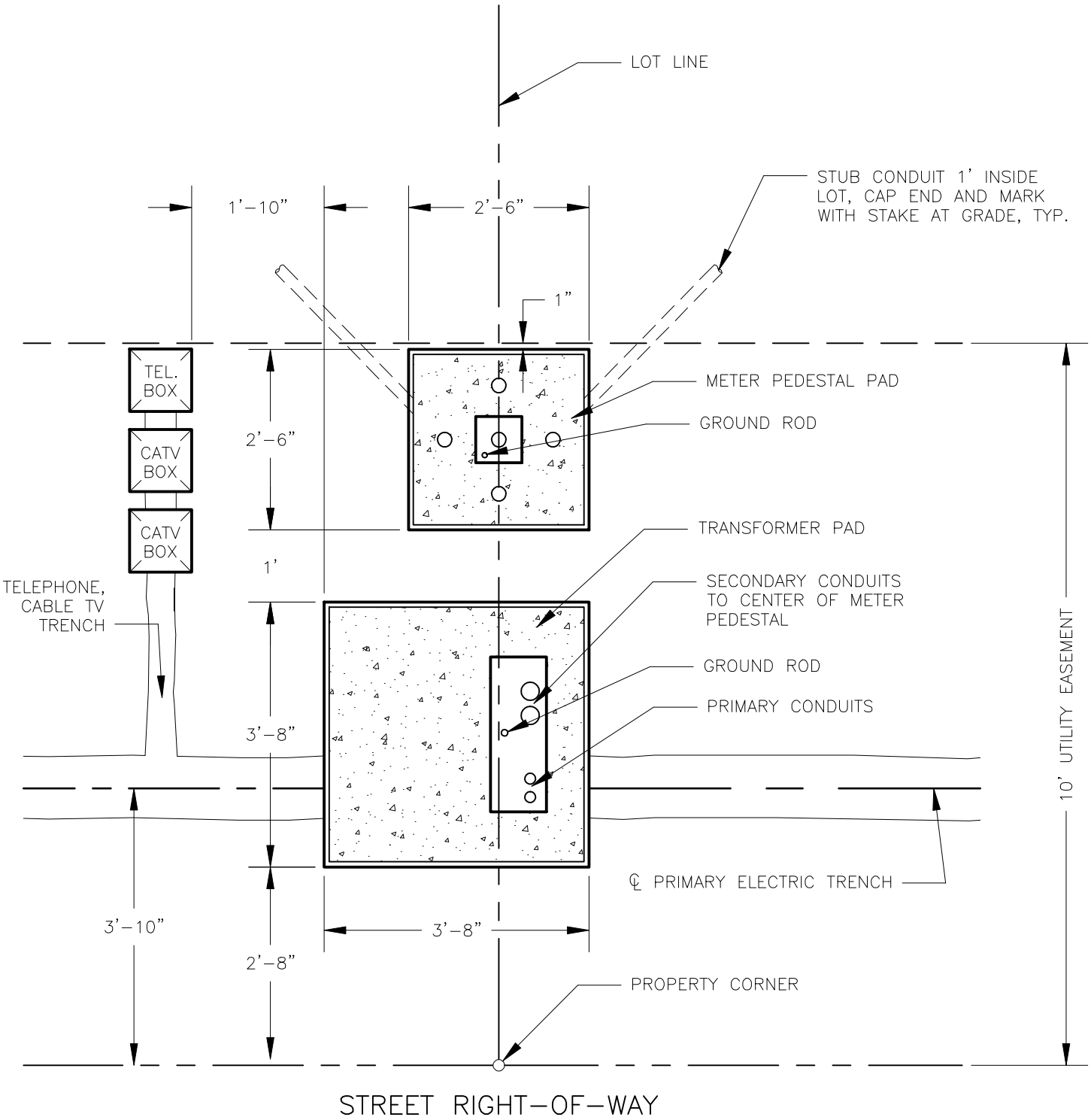

CITY OF BOERNE

ELECTRIC PAD LAYOUT IN EASEMENT FOR UNDERGROUND DISTRIBUTION

SCALE:	DRAWING No.	DATE:
N.T.S.	16100-1.1	JULY 2015

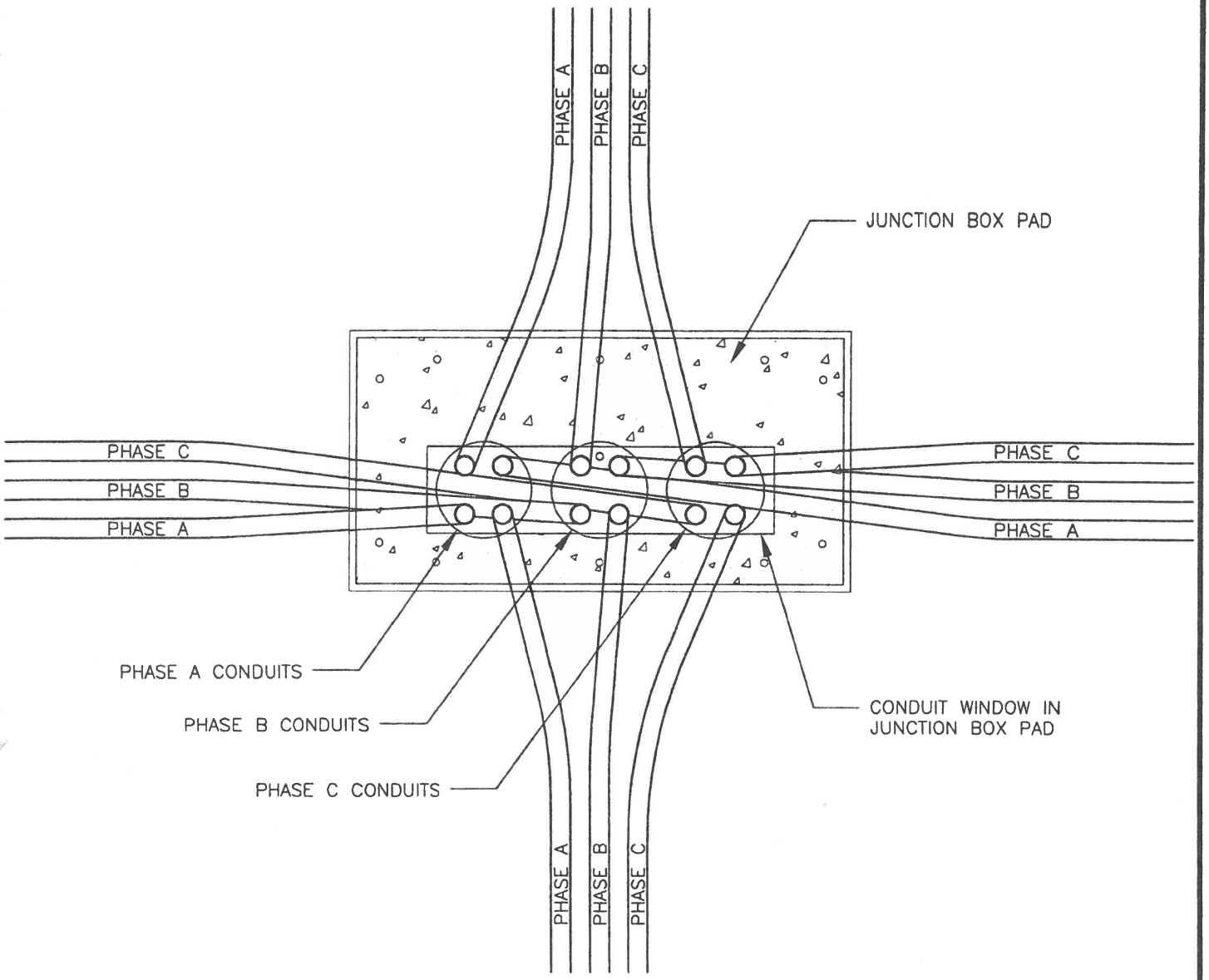

NOTES:

1. GROUP CONDUITS IN JUNCTION BOX PAD CONDUIT WINDOW BY PHASE AS SHOWN.
2. LOWER CONDUITS THAT CONFLICT BELOW OTHER CONDUITS WITH A MINIMUM OF 2 IN CLEARANCE.
3. PLACE CONDUITS WITH THE LONGEST RUNS UNDER JUNCTION BOX PAD AT THE LOWEST ELEVATIONS.
4. 12-WAY SHOWN, INSTALL OTHERS SIMILARLY.

CITY OF BOERNE		
JUNCTION BOX CONDUIT LAYOUT		
SCALE: N.T.S.	DRAWING No. 16100-1.3C	DATE: June 2020

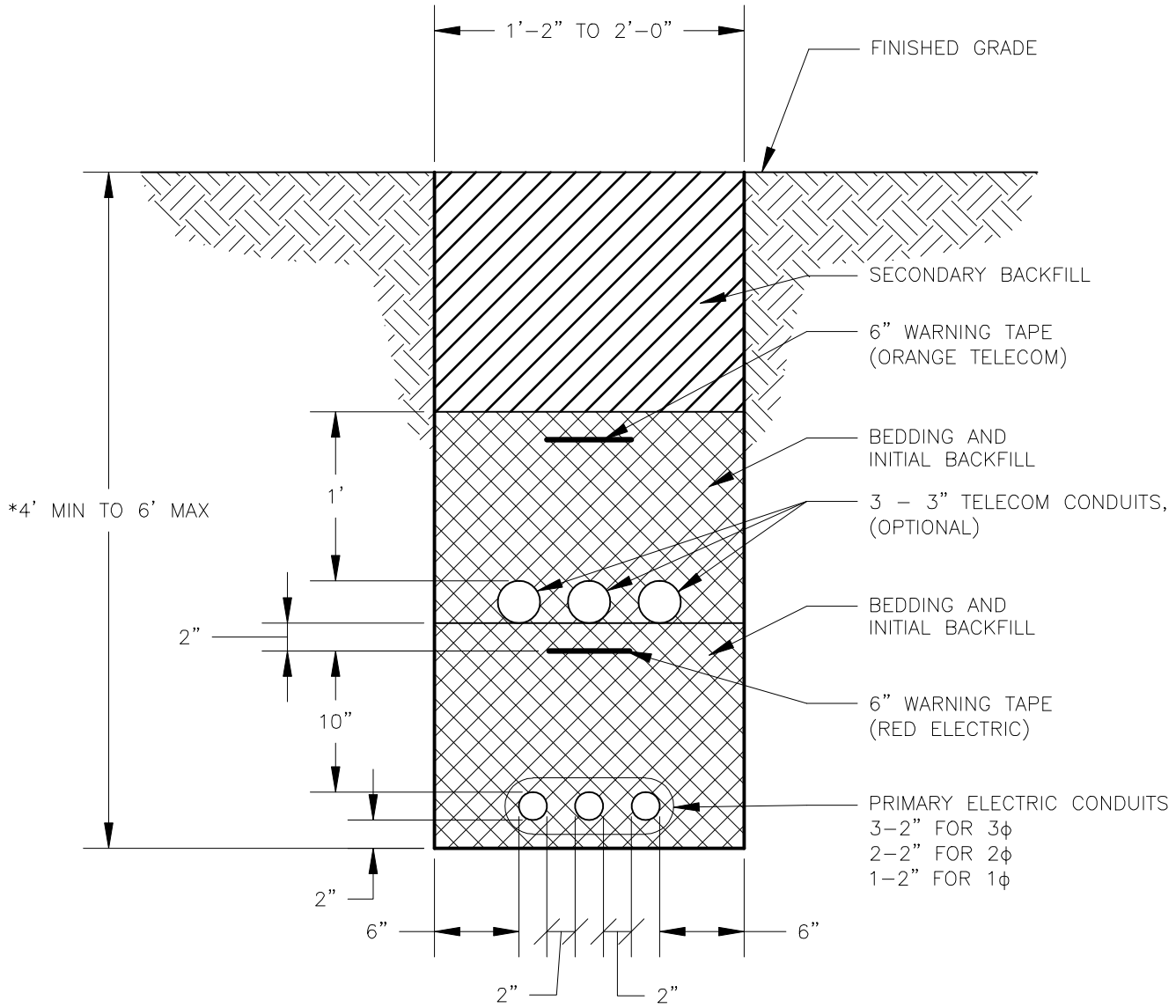

*NOTE:
ADJUST DEPTH AS NECESSARY TO PROVIDE 12 IN SEPARATION BETWEEN CONDUIT AND OTHER UTILITIES.

CITY OF BOERNE		
PRIMARY ELECTRIC TRENCH		
SCALE: N.T.S.	DRAWING No. 16100-2.0	DATE: JULY 2015

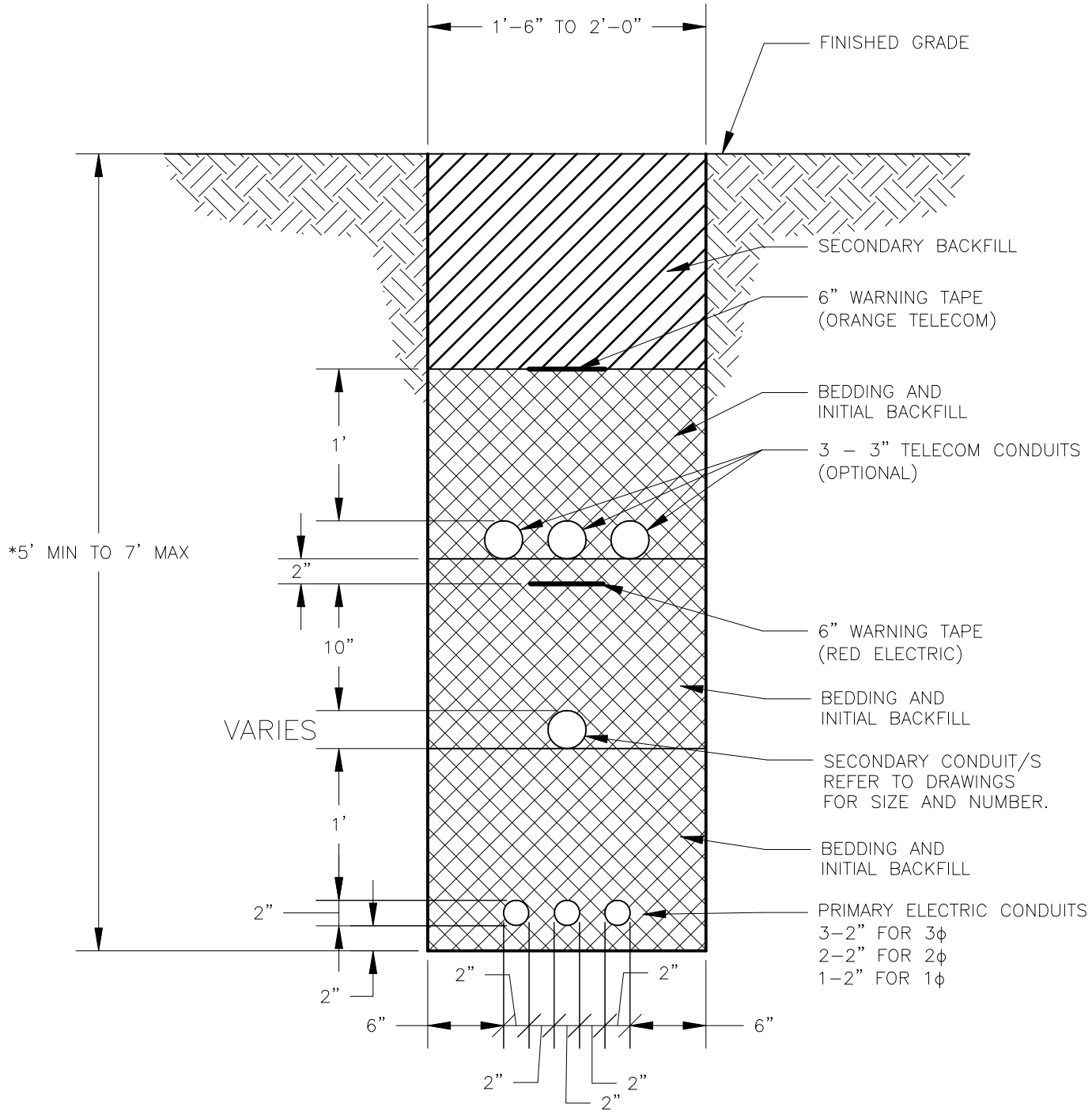

*NOTE:
ADJUST DEPTH AS NECESSARY TO PROVIDE 12 IN SEPARATION BETWEEN CONDUIT AND OTHER UTILITIES.

CITY OF BOERNE

PRIMARY AND SECONDARY ELECTRIC TRENCH

SCALE:	DRAWING No.	DATE:
N.T.S.	16100-2.1	JULY 2015

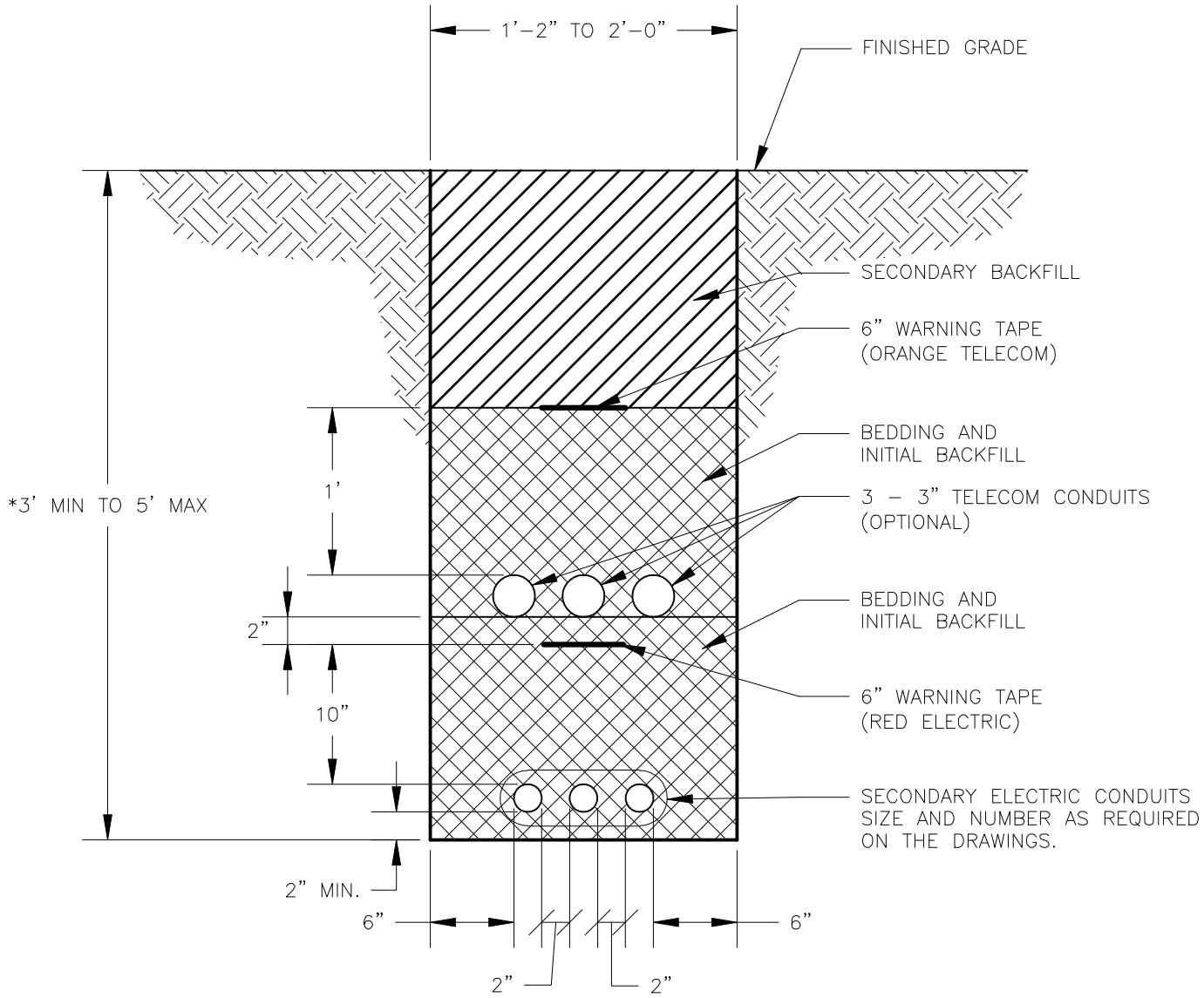

*NOTE:
ADJUST DEPTH AS NECESSARY TO PROVIDE 12 IN SEPARATION BETWEEN CONDUIT AND OTHER UTILITIES.

CITY OF BOERNE		
SECONDARY ELECTRIC TRENCH		
SCALE: N.T.S.	DRAWING No. 16100-2.2	DATE: JULY 2015

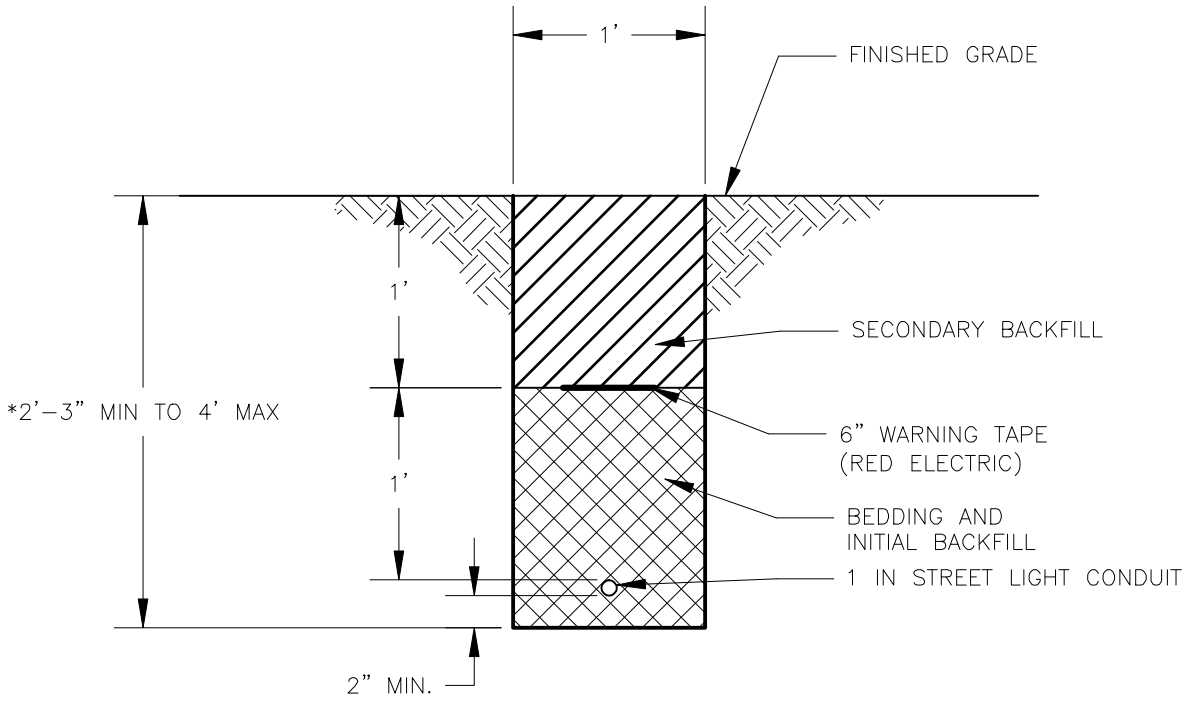

*NOTE:
ADJUST DEPTH AS NECESSARY TO PROVIDE 12 IN SEPARATION BETWEEN CONDUIT AND OTHER UTILITIES.

CITY OF BOERNE		
STREET LIGHT CONDUIT TRENCH		
SCALE: N.T.S.	DRAWING No. 16100-2.3	DATE: JULY 2015

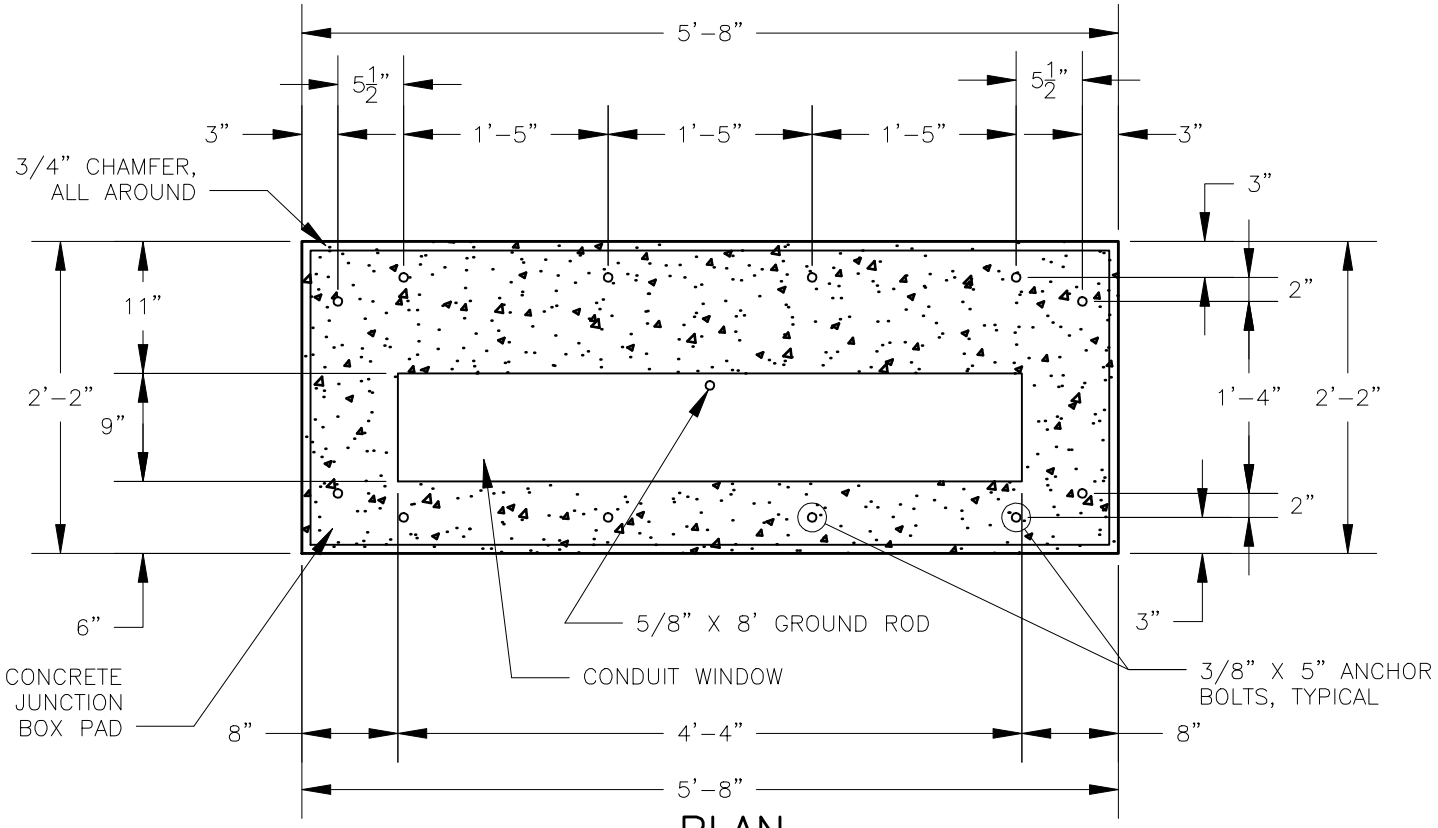

PLAN

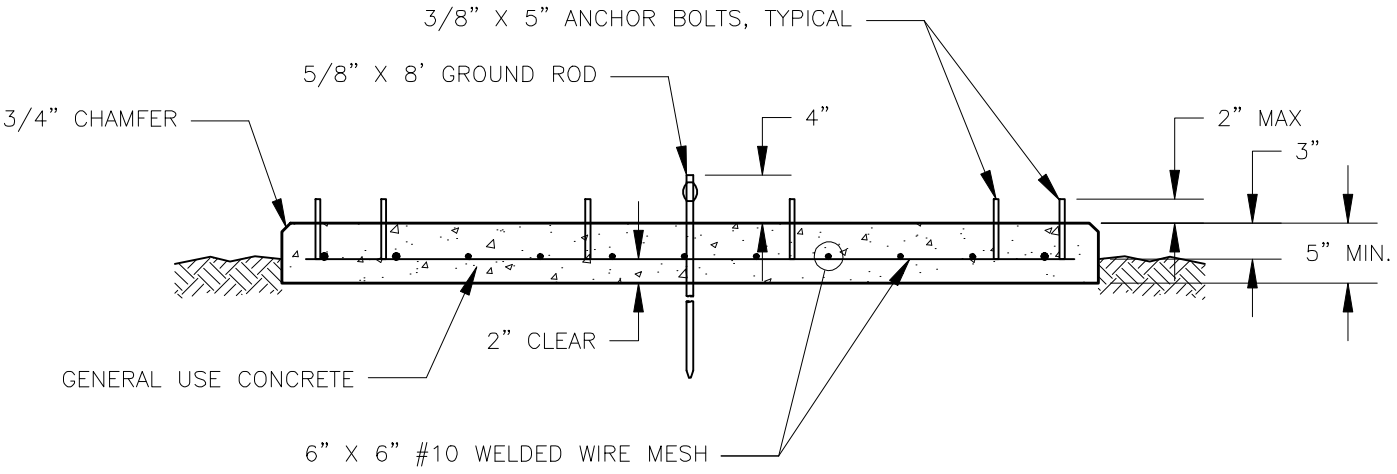

SECTION

NOTES:
1. DIMENSIONS ARE FOR DURHAM SECTIONALIZING PEDESTAL, 3P, 25KV, 600A, 306422 R. VERIFY MODEL OF JUNCTION BOX BEING USED BEFORE INSTALLING PADS.
2. PAD MAY BE PRECAST OR CAST IN PLACE, PRECAST IS RECOMMENDED.
3. SLOPE GROUND AROUND PAD TO DRAIN AWAY FROM PAD.
4. COMPACT BACKFILL AND SOIL SUPPORT PAD IN ACCORDANCE WITH SECTION 02221.

FOR JUNCTION BOX
UP TO 12-WAY

CITY OF BOERNE

THREE PHASE JUNCTION BOX PAD
FOR UNDERGROUND DISTRIBUTION

SCALE:	DRAWING No.	DATE:
N.T.S.	16100-3.0	JULY 2015

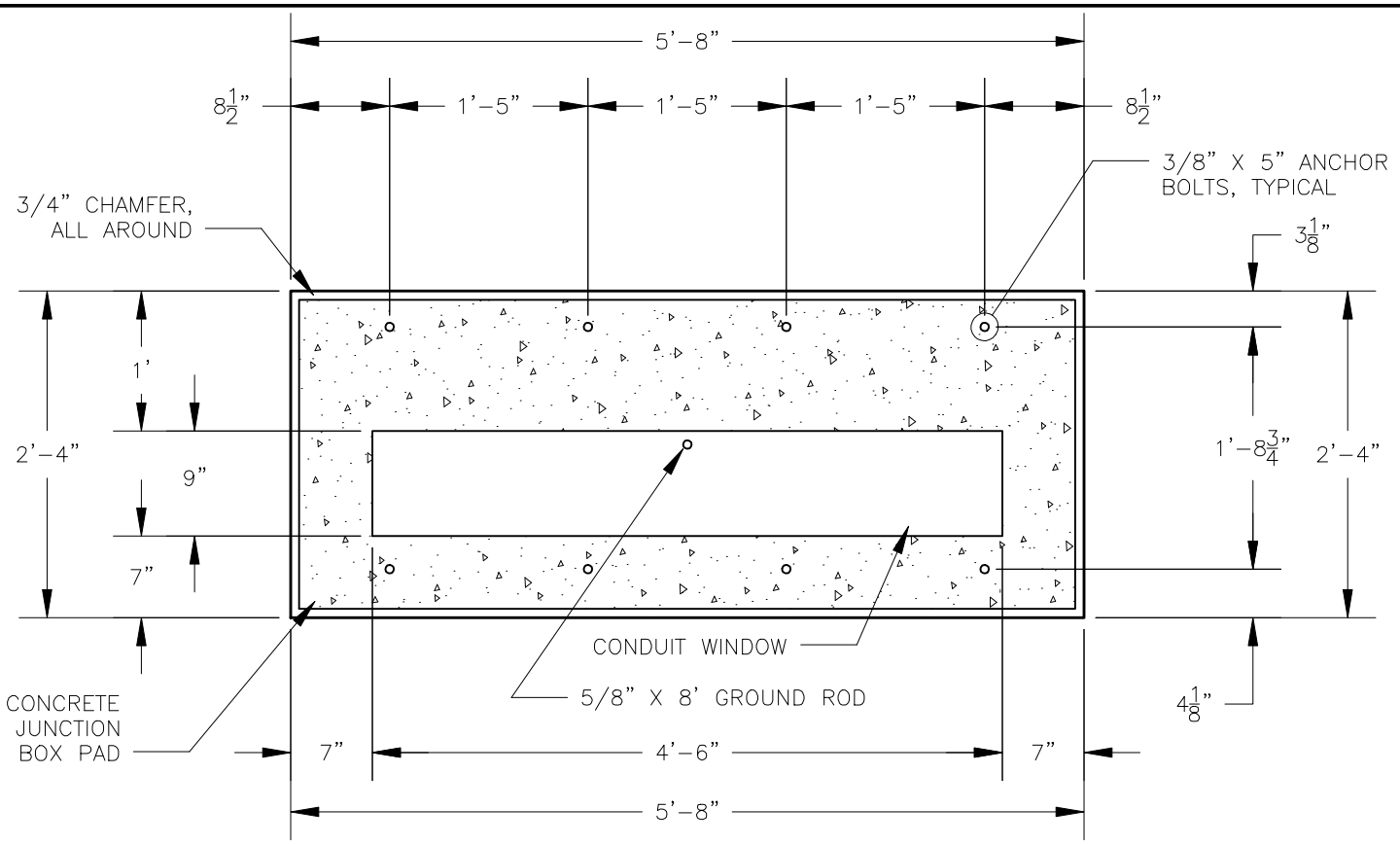

PLAN

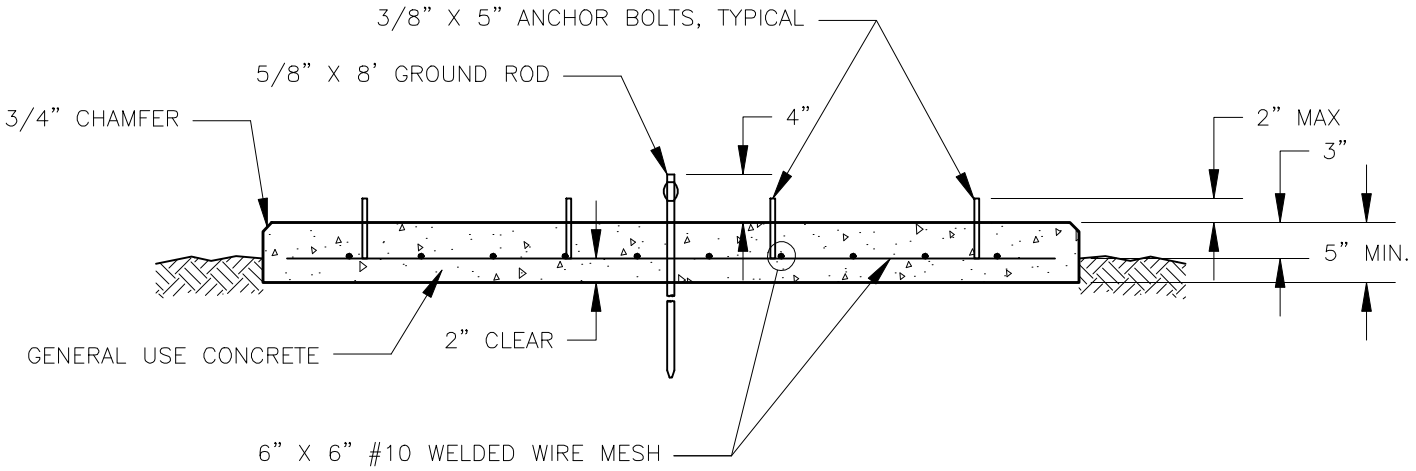

SECTION

NOTES:
1. DIMENSIONS ARE FOR DURHAM SECTIONALIZING PEDESTAL, 3P, 25KV, 600A, 306424 R. VERIFY MODEL OF JUNCTION BOX BEING USED BEFORE INSTALLING PADS.
2. PAD MAY BE PRECAST OR CAST IN PLACE, PRECAST IS RECOMMENDED.
3. SLOPE GROUND AROUND PAD TO DRAIN AWAY FROM PAD.
4. COMPACT BACKFILL AND SOIL SUPPORT PAD IN ACCORDANCE WITH SECTION 02221.

FOR JUNCTION BOX UP TO 9-WAY

CITY OF BOERNE

THREE PHASE JUNCTION BOX PAD FOR UNDERGROUND DISTRIBUTION

SCALE:	DRAWING No.	DATE:
N.T.S.	16100-3.1	JULY 2015

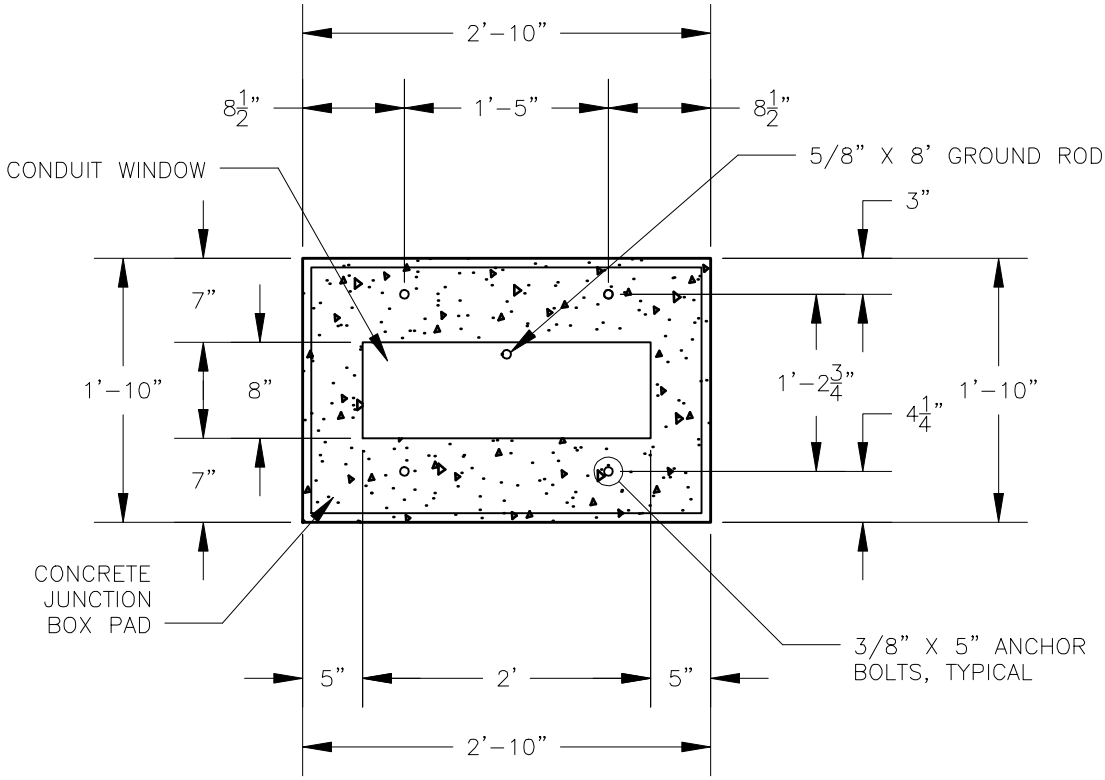

PLAN

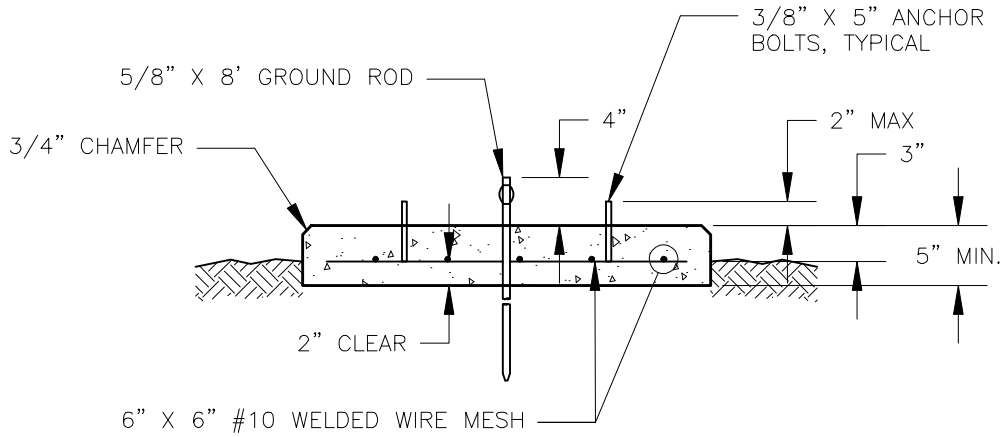

SECTION

NOTES:
1. DIMENSIONS ARE FOR DURHAM SECTIONALIZING PEDESTAL, 1P, 25KV, 200A, 303018 R. VERIFY MODEL OF JUNCTION BOX BEING USED BEFORE INSTALLING PADS.
2. PAD MAY BE PRECAST OR CAST IN PLACE, PRECAST IS RECOMMENDED.
3. SLOPE GROUND AROUND PAD TO DRAIN AWAY FROM PAD.
4. COMPACT BACKFILL AND SOIL SUPPORT PAD IN ACCORDANCE WITH SECTION 02221.

FOR SINGLE PHASE JUNCTION BOX

CITY OF BOERNE

SINGLE PHASE JUNCTION BOX PAD FOR UNDERGROUND DISTRIBUTION

SCALE:	DRAWING No.	DATE:
N.T.S.	16100-3.2	JULY 2015

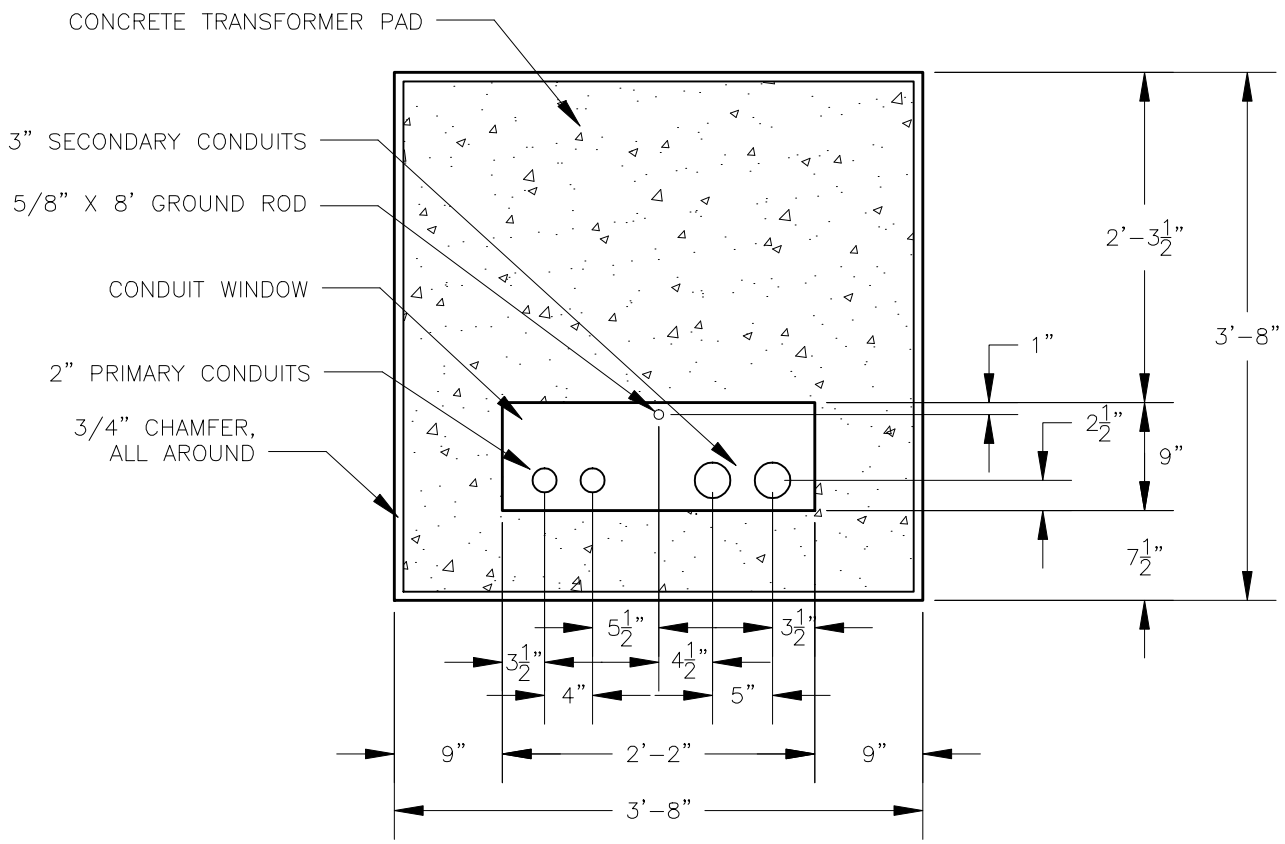

PLAN

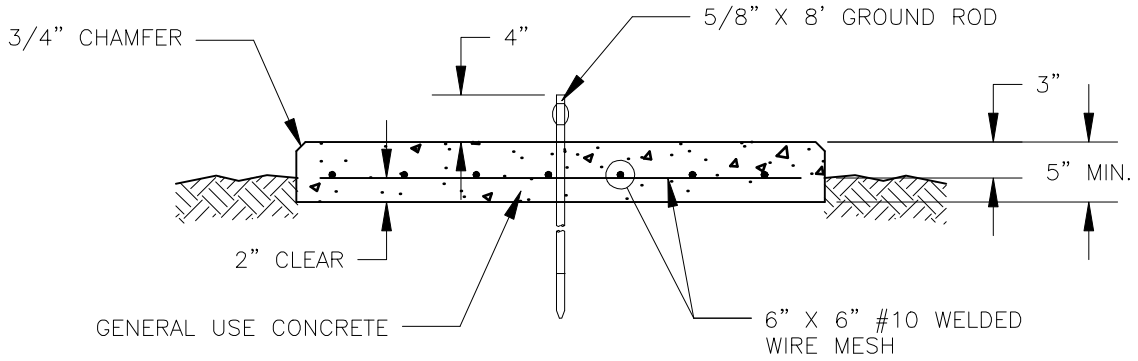

SECTION

NOTES:
1. PAD MAY BE PRECAST OR CAST IN PLACE. PRECAST IS RECOMMENDED.
2. DIMENSIONS ARE FOR 1 SINGLE PHASE TRANSFORMER, 167 KVA OR SMALLER.
3. SLOPE GROUND AROUND PAD TO DRAIN AWAY FROM PAD.
4. COMPACT BACKFILL AND SOIL TO SUPPORT PAD IN ACCORDANCE WITH SECTION 02221.

CITY OF BOERNE

SINGLE PHASE TRANSFORMER PAD FOR UNDERGROUND DISTRIBUTION

SCALE:	DRAWING No.	DATE:
N.T.S.	16100-3.3	JULY 2015

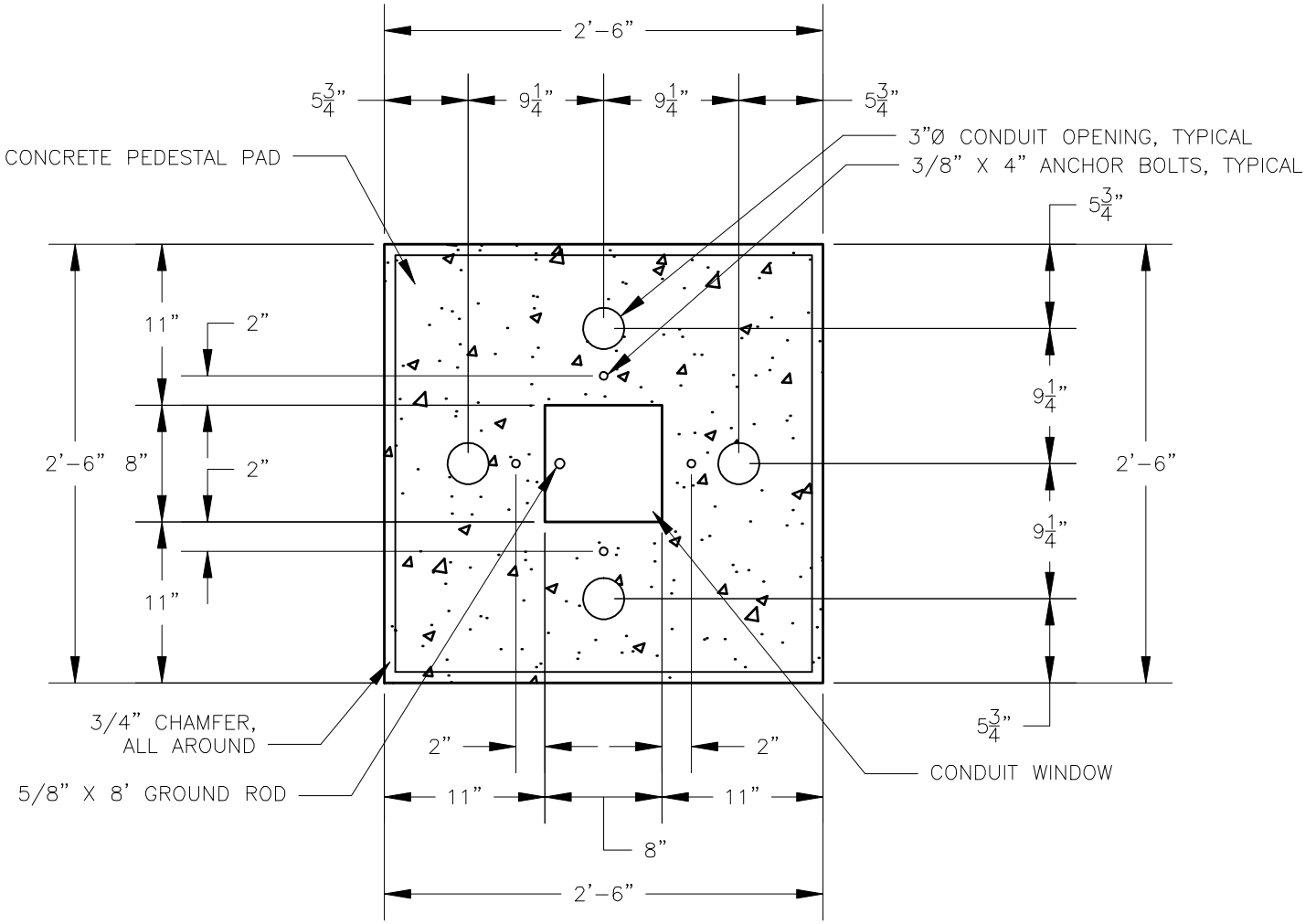

PLAN

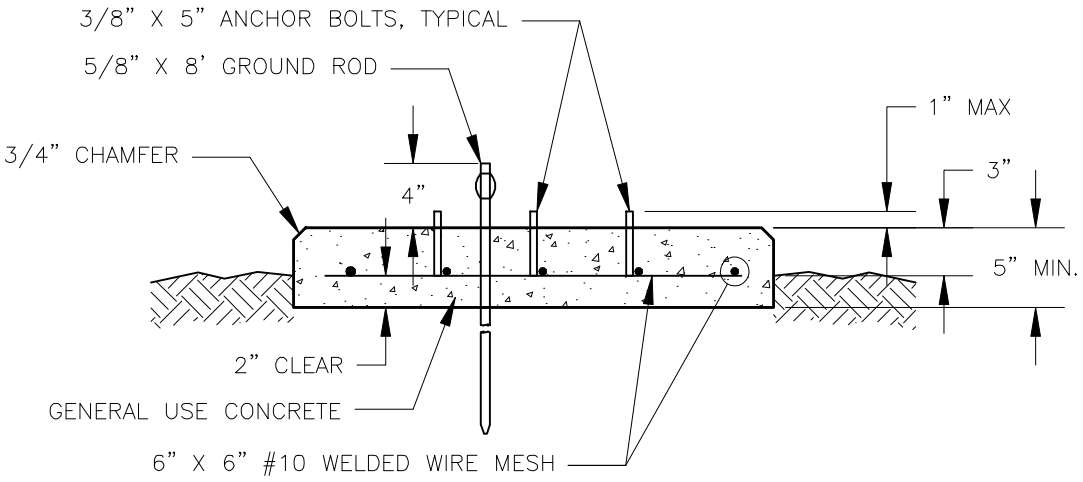

SECTION

NOTES:
1. DIMENSIONS ARE FOR MILBANK S9650-0 METER PEDESTAL.
2. PAD MAY BE PRECAST OR CAST IN PLACE, PRECAST IS RECOMMENDED.
3. SLOPE GROUND AROUND PAD TO DRAIN AWAY FROM PAD.
4. COMPACT BACKFILL AND SOIL TO SUPPORT PAD IN ACCORDANCE WITH SECTION 02221.

CITY OF BOERNE

METERING PEDESTAL PAD FOR UNDERGROUND DISTRIBUTION

SCALE:	DRAWING No.	DATE:
N.T.S.	16100-3.4	JULY 2015

NOTES;
1. CITY OF BOERNE TO INSTALL POLE AND STANDOFF BRACKET PRIOR TO INSTALLATION OF BENDS IN CONDUIT.
2. AFTER POLE IS IN PLACE WITH STANDOFF BRACKET, INSTALL BENDS AND CONDUIT TO THE STANDOFF BRACKETS.
2. TAPE TOP OF CONDUITS TO PREVENT ENTRY OF DEBRIS.

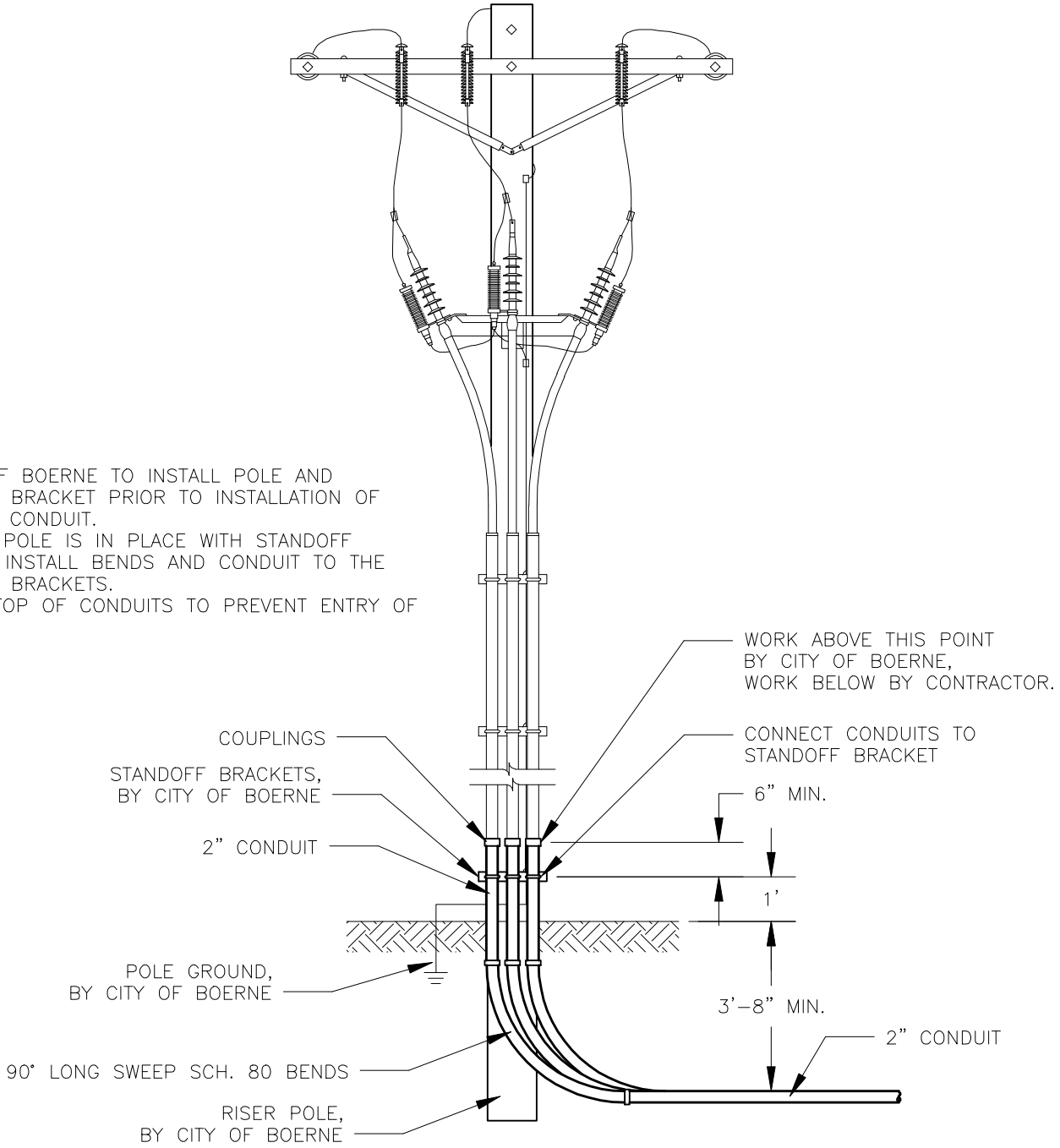

CITY OF BOERNE

UNDERGROUND TO OVERHEAD THREE PHASE RISER

SCALE:	DRAWING No.	DATE:
N.T.S.	16100-4.0	JULY 2015